seitron
Innovation Technology

USE AND MAINTENANCE

N•VO

Gas Analyzer

TABLE OF CONTENTS

1.0 IMPORTANT INFORMATION 5
1.1 Information about this manual 5
1.2 Danger levels and other symbols 5
2.0 SAFETY 6
2.1 Safety check 6
2.2 Intended purpose 6
2.3 Improper use of the product 6
2.4 Precautions for the usage of the Li-Ion battery package 6
3.0 GENERAL OVERVIEW 7
4.0 PRODUCT DESCRIPTION 9
4.1 Working principle 9
4.2 Measurement sensors 9
4.3 CO dilution (if the configuration allows it) 9
4.4 Autozero 10
4.5 Fuel types 10
4.6 Gas extraction pump 10
4.7 Pressure sensor 10
4.8 Printer 10
4.9 Simultaneous measurement of pressures, O2, pollutants and efficiency calculation 10
4.10 Smoke measurements 10
4.11 Measuring ambient CO 10
4.12 Battery charger connection 10
4.13 Calibration certificate 11
4.14 Electromagnetic compatibility 11
4.15 PC Connection 11
4.16 Bluetooth® connection 11
4.17 Available applications and software 11
5.0 MECHANICAL DESCRIPTION 12
5.1 Front view 12
5.2 Back view 13
5.3 Inputs 14
6.0 USING THE FLUE GAS ANALYSER 15
6.1 Preliminary operations 15
6.2 Analyzer power supply 15
6.2.1 Internal battery charge level 15
6.2.2 Use with external power pack 16
6.3 Power ON / OFF 16
6.3.1 Instrument home page 17
6.4 Warning 18
6.4.1 Positioning of the instrument during operation 19
7.0 CONNECTION DIAGRAM 20
7.1 Flue gas and combustion air temperture probe connection diagram 20
7.2 Probe connection for simultaneous pressure, O2, combustion parameters and efficiency calculation 21
7.3 PC connection 22
8.0 FLUE GAS ANALYSIS 23
8.1 Warnings 23
8.2 Switching on the instrument and auto-calibration 23
8.3 Inserting the flue gas probe in the stack 23
8.4 Setting the main analysis parameters 25
8.4.1 Analysis parameters 26
8.5 Start and end of the combustion analysis in manual mode 28
8.6 Starting the combustion analysis on automatic mode (Data Logger mode) 29
8.6.1 Ending the combustion analysis on automatic mode (Data Logger mode) 30
8.7 End of analysis 31
8.7.1 Checking the water trap / filter assembly 31
9.0 OPERATOR 32
10.0 MEASUREMENTS 33
10.1 Draft measurement 34
10.2 Smoke measure 34
10.3 Ambient CO measaure 34
10.4 Temperature measure 34
10.5 Pressure measure 34
10.6 “P gas” Measures network gas pressure 35
11.0 SETTINGS 36
11.1 Instrument configuration 37
11.1.1 Bluetooth® 37

11.1.2 Time/Date 37
11.1.3 Brightness 37
11.1.4 Language 37
11.1.5 Country 37
11.1.6 Restore 37
11.2 Operator 37
11.3 Information 37
11.3.3 Infoservice 37
11.4 Diagnostic 38
11.4.1 FW update 38
11.4.2 Maintenance 38
11.4.3 Pump 38
11.4.4 On site calibration 38
11.4.5 Sensors 43
11.4.6 Leak test 44
11.5 Autozero 44
11.5.1 Autozero 44
11.5.2 Cleaning 44
12.0 PRINT 45
12.1 Printer 46
12.1.1 Pairing BT 46
12.2 Configuration 46
12.2.1 Header 46
12.2.2 Contrast 46
12.2.3 Copies* 46
12.2.4 Report* 46
12.2.5 Date/Time* 46
12.3 Measurement list 47
12.4 Print test 47
12.5 Paper feed 47
13.0 ARCHIVE 48
13.1 Archive organization 49
13.2 Rename folders 49
13.3 Delete folders 49
14.0 MAINTENANCE 50
14.1 Preventive maintenance 50
14.2 Routine maintenance 50
14.2.1 Cleaning the flue gas probe 50
14.2.2 Maintenance for the water trap / filter assembly unit 51
14.2.3 Instrument internal parts access 54
14.2.4 Sensor replacement 55
14.2.5 Replacing of the sensors 55
14.2.6 Battery replacement 57
14.3 Instrument expandability 59
14.4 Firmware Update 59
15.0 GAS SENSORS 60
15.1 Positioning of the gas sensors in the instrument 60
15.2 CxHy sensor for measurement of the unburnt hydrocarbons 61
15.3 CO2 sensor for Carbon Dioxide measurement in combustion processes 61
16.0 TECHNICAL SPECIFICATIONS 62
16.1 Analyzer dimensions 63
16.2 Case size 63
17.0 MEASUREMENT AND ACCURACY RANGES 64
18.0 SPARE PARTS AND SERVICING 66
18.1 Spare parts 66
18.2 Accessories 66
18.3 Service Centers 66
ANNEX A - "Seitron Smart Analysis" APP 68
ANNEX B - Analysis report 70
ANNEX C - Optional measures list 73
ANNEX D - Coefficient of the fuels and Formulas 75
WARRANTY CERTIFICATE 77
TROUBLESHOOTING 79

1.0 IMPORTANT INFORMATION

1.1 Information about this manual

◊ This manual describes the operation and the characteristics and the maintenance of the Combustion Analyzer.

◊ Read this operation and maintenance manual before using the device. The operator must be familiar with the manual and follow the instructions carefully.

◊ This use and maintenance manual is subject to change due to technical improvements - the manufacturer assumes no responsibility for any mistakes or misprints.

Respect your environment: think before printing the full manual on paper.

1.2 Danger levels and other symbols

WARNING!

The magnets in the back of the instrument can damage credit cards, hard driver, mechanical watches, pacemakers, defibrillators and other devices proven sensitive to magnetic fields.
It is recommended to keep the instrument at a distance of at least 10" away from these devices.

WARNING!

Read information carefully and prepare safety appropriate action!
To prevent any danger from personnel or other goods. Disobey of this manual may cause danger to personnel, the plant or the environment and may lead to liability loss.

WARNING! Ensure correct disposal
Dispose of the battery pack at the end of its working life only at the dedicated collecting bin.
The customer takes care, at his own cost, that at the end of its working life the product is collected separately and it gets correctly recycled.

2.0 SAFETY

2.1 Safety check

Use the product according to what is described in chapter "Intended purpose". During the instrument operation, comply with the current standards. Do not use the instrument if damaged on the outer cover, on the power supply plug or on the cables. Do not take measures on non-isolated components / voltage conductors. Keep the instrument away from solvents.
For the maintenance of the instrument, strictly comply with what's described in this manual at the "Maintenance" chapter.
All the interventions not specified in this manual, may be performed exclusively by Seitron Americas assistance centers. Otherwise, Seitron Americas declines every responsibility about the normal operation of the instrument and on the validity of the several homologations.

2.2 Intended purpose

This chapter describes the areas of application for which the Novo is intended.
Using the Novo in other application areas is on the risk of the operator and the manufacturer assumes no responsibility and liability for loss, damage or costs which could be a result. It is mandatory to read and pay attention to the operating/maintenance manual.

All products of the series Novo are handheld measuring devices in professional flue gas analysis for:
- Furnaces (burning oil, gas, wood, coal)
- Low-temperature and condensing boilers
- Gas heaters
- Engines
- Commercial industrial boilers

Due to other configuration with electrochemical sensors it is possible to use the measuring instrument in following application area:
- Service engineers/mechanics of burner/boiler manufacturers
- Service industrial combustion plants

Additional functions of the measuring instrument:
- Flue gas analysis in Manual or Data Logger mode
- Calculating of stack heat loss and efficiency
- CO and NO environment measurement
- Store Smoke value, calculating mean value
- Measuring differential pressure
- Draft measurement

2.3 Improper use of the product

The use of Novo in application areas other than those specified in Section 2.1 "Intended use of the product" is to be considered at the operator's risk and the manufacturer assumes no responsibility for the loss damage or costs that may result.
It is compulsory to read and pay attention to the instructions in this use and maintenance manual.
Novo should not be used:
- For continuous measurements > 1h
- As safety alarm instrument

2.4 Precautions for the usage of the Li-Ion battery package

Pay attention while handling the battery package inside the instrument; a wrong or improper usage may lead to heavy physical injuries and/or damages:
- Do not create a short circuit: make sure that the terminals are not in contact with metal or other conductive materials during transportation or storage.
- Do not apply with inverted polarities.
- Do not make the batteries come in contact with liquid substances.
- Do not burn the batteries nor expose to temperature higher than 140 °F (60°C).
- Do not try to disassemble the battery.
- Do not cause collisions or pierce the batteries. Improper use can cause damages and internal short circuits not always externally visible.
  If the battery package has fallen or has been hit with an hard surface, regardless the external shell condition:
  - Stop operation;
  - Dispose of the battery in compliance with the disposal instructions;
- Do not use batteries with leaks or damages.
- Charge the batteries only inside the instrument.
- If a malfunction occurs or if over heating signs occur, immediately remove the battery package from the instrument.
  Warning: the battery may be hot.

3.0 GENERAL OVERVIEW

The instrument is equipped with:

- Pneumatic circuit capable to store up to 4 sensors.
- Anti-condensation / Filter assembly unit integrated in the instrument, easily accessible for all verification and maintenance operations.
- CO dilution pump to protect the CO sensor placed in position 1.
- Solenoid valve, to perform the autozero with the probe inserted in the stack.
- Valve for zeroing the pressure sensor in order to measure the draft during the combustion analysis.
- Male hose connection ø8mm, for measuring the gas valve pressure at the same time as measuring the draft.
- Intuitive user interface: the instrument can be used without the support of the user manual.
- 7" Color display with CTP.
- Rechargeable 'Li-Ion' battery package.
- Impact protection system integrated on the instrument case.
- Ticket printing through printer module integrated in the instrument (if the instrument configuration provides for it) or via an external Bluetooth® printer (optional).
- QR code generation in order to download the analysis / measures data shown on the display, having previously installed the special APP "SEITRON SMART ANALYSIS" available on play-store and Apple iOS App store.
- Connectivity with a computer through the USB connection and/or Bluetooth®. Once the special software provided with the instrument is used, this allows for the storage of combustion analysis as well as the configuration of the main parameters.
- Connectivity with a smartphone through Bluetooth®. Once the specific APP "SEITRON SMART ANALYSIS" available on Google play-store is installed on the device, the user can start remote analysis of combustion and/or view real-time data of the analysis in progress.

Main functions:

- Combustion analysis in manual or automatic mode (according to the data logger function, user-defined mode).
- Comes with most used fuel parameters (such as natural gas, LPG, gas oil and fuel oil).
- Possibility to store in memory the parameters for additional further fuels, once their chemical composition is known.
- Monitoring of pollutants (emissions).
- Memory capable of storing up to 2,000 full analysis.
- Storing of acquired data and their averaging.

Measurable gases

- O_2
- CO H2 compensated
- CO (0-20,000 ppm)
- CO (0-100,000 ppm)
- NO Dual Range (Low / High)
- NO_2 Dual Range (Low / High)
- SO_2 Dual Range (Low / High)
- NOX
- NH3
- H2
- H2S
- CxHy referred to the methane
- CO_2 NDIR
- CH4 NDIR

Measurements

- Ambient CO (with the internal sensor)
- Simultaneous measurement of pressure, O_2 and pollutants
- Stack draft

- Smoke test (with the use of the external manual pump)
- Gas pressure in the piping
- Combustion air measurement
- Auxiliary temperatures

Maintenance

- All the sensors installed on the instrument can be replaced by the user, as long as the sensor is on the same installation position as the previous one.
- The instrument requires annual calibration to be carried out at any authorized service center.

Certificate of calibration

The instrument is accompanied a calibration certificate compliant with standard EN 17025.

4.0 PRODUCT DESCRIPTION

4.1 Working principle

The gas sample is taken in, through the flue gas probe, by a membrane pump inside the instrument.
The probe is featured with a sliding fitting-cone that allows the probe itself to be inserted into holes with a diameter from 11 mm to 16 mm, and to set the immersion depth: the smoke pick-up point must approximately correspond to the center of the satck.
The gas sample which must be analyzed must be taken to the measurement sensors dehumidified and purified from solid combustion residues. In order to achieve this, a water trap is used, which is a transparet plastic cylinder placed inside the instrument.
Its purpose is to decrease the speed of the air in order to precipitate the heavier dust particles and condense the vapor contained in the combustion gases.
A low porosity replaceable line filter it is placed on the condensation trap and it has the purpose of retaining the solid particles remaining suspended in the gases. It is recommended to replace the filter if it is visibly dirty (see chapter "Maintenance").
The gas is then analyzed in its components by the installed sensors.
The electrochemical sensor grants very precise results in a time interval up to about 60 minutes, time interval when the instrument calibration can be considered very stable. When it is necessary to perform log time measurements, it is advisable to make a new instrument autozero by letting clean air flow inside the pneumatic circuit for three minutes. During the zero calibration phase, the instrument sucks in clean air from the environment and detects the zero drift of the sensors (20.95% for the O_2 sensor), it compares them with the programmed values, and then proceeds to their compensation.
During the autozero phase of the gas sensors, the zero of the pressure sensors is also performed.
The instrument must be calibrated once a year in a laboratory authorized to issue calibration certificates.

4.2 Measurement sensors

The instrument uses pre-calibrated gas sensors.
The sensors do not require special maintenance, but must be replaced periodically when exhausted.
The oxygen measurement (%O2) is performed with an electrochemical cell that behaves like a battery that is subject, over time, to lose sensitivity due to the fact that 20.9% oxygen is always present in the air.
Toxic gases measurements (CO, SO2, NO, NO2) are carried out with electrochemical sensors that are not subject to natural deterioration because they are intrinsically free from oxidation processes.
Toxic gas sensors, if subjected to concentrations higher than 50% of their measuring range for more than 10 minutes continuously, may show a drift of ± 2% and an longer zeroing times.
In this case, before turning off the analyzer, it is advisable to wait until the measured value is less than 20ppm by sucking in clean air.
In any case, the instrument provides a cleaning cycle of the pneumatic circuit, the duration of which depends on the setting made in the Configuration menu.
The gas must not be at a pressure that can damage or destroy the sensors; for this reason the suction pump is continuously regulated, so as to guarantee an appropriate flow to the sensors. The maximum allowed pressure is ± 40 inH2O.
Equipped with a solenoid valve for automatic autozero, the instrument performs an automatic cleaning cycle and turns off when the sensors have returned to a value close to zero.

WARNING!
Some sensors (for example NH3, H2, H2S, SO2,...) are sensible to other gases called interfering gases. On the analysis phase, the influence of interfering gases is compensated only if on the instrument are installed the correspondent sensors.

4.3 CO dilution (if the configuration allows it)

One of the characteristics of the electrochemical sensor for the measurement of CO is the need to require very long self-calibration time in case it has been in contact with high gas concentration (greater than the full scale) for a long time.
The combustion analyzer is equipped with the CO dilution feature for the sensor on position 1. The CO sensor is protected by an automatic dilution system that allows to extend the measuring range of the sensor without overloading the sensor itself.
The dilution system allows to have the CO sensor efficient any time and ready to perform properly even in case of very high concentration of CO.
The dilution system also allows to extend the measurement range of the CO sensor as follows:
- up to 100,000 ppm for a CO sensor with 8000 ppm full scale

- up to 250,000 ppm for a CO sensor with 20,000 ppm full scale

In this way in addition to better manage the wearing of the sensor, it is also possible to continue sampling, without any work interruption.

4.4 Autozero

The instrument is featured with a solenoid valve to perform the automatic autozero with the smoke sampling probe inserted in the stack. The autozero is performed using the ambient air of where the instrument is placed; it is important that this step is performed in an environment with clean air.

During the autozero, the zero of the pressure sensor is also performed.

4.5 Fuel types

The device is provided with the technical data of the most common types of fuels stored in its memory. By using the PC configuration program, available as an optional, it is possible to add combustibles and their coefficients in order to define up to a maximum of 16 combustibles, other than the default ones.

For more details see Annex C.

4.6 Gas extraction pump

The sample pump located inside the instrument is a DC-motor-driven diaphragm pump, powered by the instrument, and is such as to obtain optimal flow of the sampled gas being analysed; an internal sensor that measures the flow allows to:

- Keep the flow rate of the pump constant
- Check the efficiency of the pump
- Check the degree of clogging of the filters

4.7 Pressure sensor

The instrument is internally provided with a piezoresistive differential pressure sensor which can be used for measuring the draft (negative pressure) in the chimney for differential pressure measurement and possibly for other measurements (pressure of gas in the piping, pressure loss across a filter, etc.).

Any potential drift of the sensor are nulled thanks to the autozeroing system.

4.8 Printer

If the configuration allows it, the instrument is featured with a printer module permanently attached to the instrument and so the user can print the results of the measurements on a ticket that certifies the system performaces.

If the instrument does not include the printer module, this can be installed at a later time by sending the instrument to a Seitron service center.

Alternatively, a remote Bluetooth® printer can be associated with the instrument.

In both cases, through the special parameter which is visible on the home page of the instrument, it is possible to select the printer to use (internal or external) and to set the related printing settings.

4.9 Simultaneous measurement of pressures, O2, pollutants and efficiency calculation

In order to obtain exact boiler combustion parameters, the instrument allows to measure simultaneously the input or output pressure of the gas valve, the level of O2, the levels of pollutants (CO) and all the calculated parameters needed to obtain the correct value of yield.

4.10 Smoke measurements

It is possible to enter the smoke values measured according to the smoke comparison scale. The instrument will calculate the average and print the results in the analysis report.

4.11 Measuring ambient CO

Probe for monitoring the concentration of CO and checking safe conditions in the boiler room.

4.12 Battery charger connection

Supplied with the instrument comes a power adapter with 5V, 2A output for charging the internal battery.

Paragraph 5.1 shows the socket for inserting the battery charger into the instrument.

Once recharging has started, the LED on the front will turn red, while when the batteries are fully charged the LED will remain green.

4.13 Calibration certificate

The device comes with a calibration certificate compliant with standard ISO/IEC 17025.

4.14 Electromagnetic compatibility

The instrument was designed to comply with Council Directive 2014/30/EC governing electromagnetic compatibility. Seitron Americas' declaration of conformity may be found in Annex E.

4.15 PC Connection

With the provided USB cable or in Bluetooth (optional) mode it is possible to connect the instrument to a personal computer with Microsoft Windows 7 o later operative system, after installing the appropriate software "Seitron Smart Analysis", which can be downloaded from the website www.seitronamericas.com.

4.16 Bluetooth® connection

The analyzer is internally equipped with a Bluetooth® module, which allows the communication with the following remote devices:

- Bluetooth® printer
- Smartphone or tablet of latest generation on which the Google Android v.5.0 (Jelly Bean) or latter operative system is installed, after installing the proper "Seitron Smart Analysis" APP available on Google Play store.
- PC with Microsoft Windows 7 or later operative system and Bluetooth® connection after installing the proper software "Seitron Smart Analysis" which can be downloaded from the website www.seitronamericas.com.

The maximum transmission range in open field is 100 meters, with the condition that the connected device has a Bluetooth® class 1 connection.

This solution allows superior operator freedom of movement, who is not directly connected to the instrument for acquisition and analysis operations, with remarkable advantages for many applications.

Available Software and applications.

4.17 Available applications and software

- Seitron Smart Analysis

  PC software, with Microsoft Windows 7 or later operative system, which can be downloaded from the web site www.seitronamericas.com.
  Software for devices with Google Android OS v.5.0 and later
  Software for devices with Apple iOS v.12.2 and later

  Features:
  Displays the label data of the instrument.
  Configures the instrument.
  Remotely displays the real-time analysis coming from the portable analyzer and to save the acquired data.
  Displays and/or exports (in csv format, which can be opened with excel, and/or pdf) or delete the stored analyses.
  The APP also allows to scan the QR code generated by the instrument to download the data of the analyses and/or of the performed measures.

5.0 MECHANICAL DESCRIPTION

5.1 Front view

1*	Printer module	4	On / Off power button
1a*	Lid to access the paper roll of the printer	5	Probe inputs
2	USB type C interface, for connecting the instrument to a personal computer or to the battery charger.		
3	User interface		

* This component is present only if the instrument model is featured with the internal printer module.

5.2 Back view

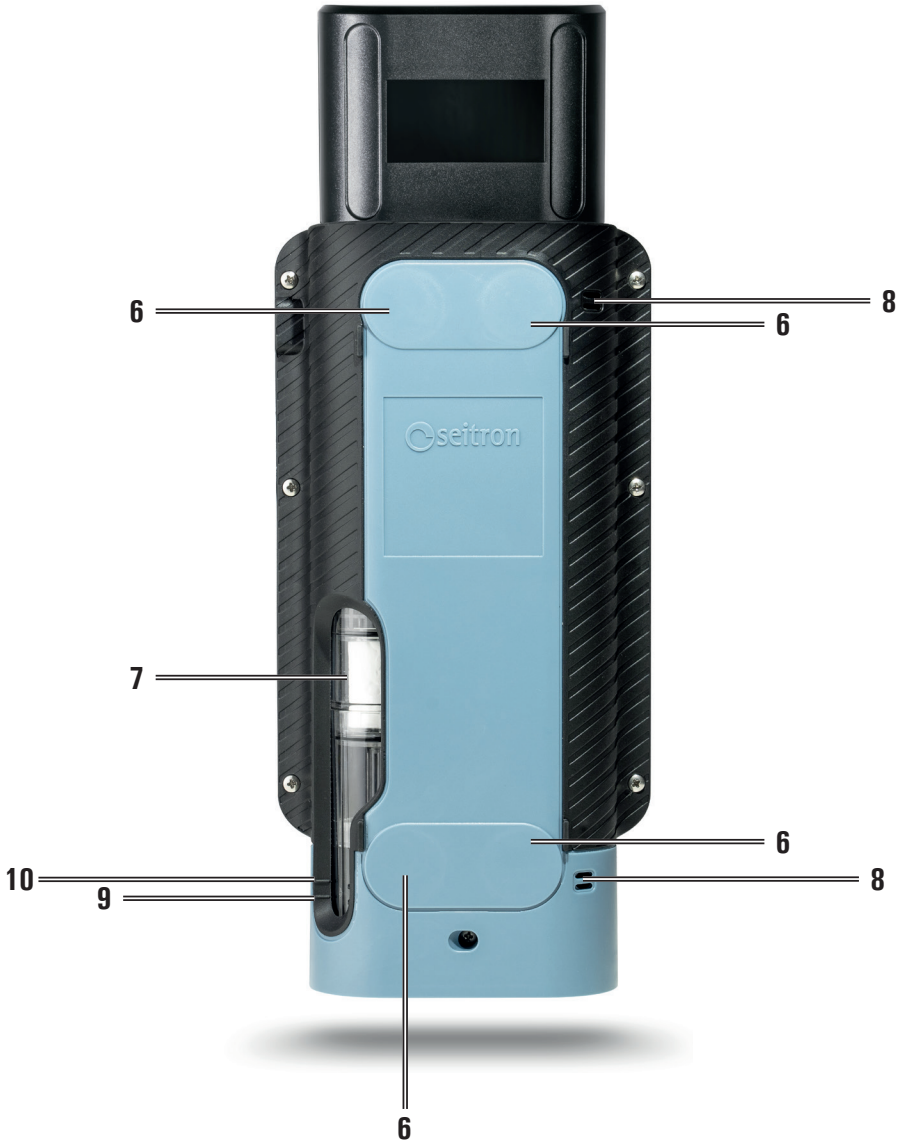

6	Magnets	9	Water trap low level notch
7	Water trap / filter assembly	10	Water trap high level notch
8	Gas output		

5.3 Inputs

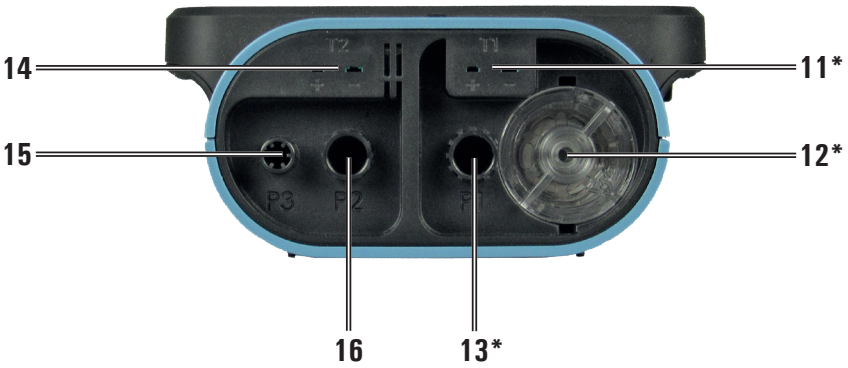

11*	(T1) Female connector Tc-K Tc-K input male connector for the flue probe.	14	(T2) Tc-K female connector Connection for air temperature probe Tc-K male connector.
12*	Female pneumatic connector for water trap/ filter assembly.	15	(P3) Male pneumatic connector Pneumatic input for gas valve pressure measurement.
13*	(P1) Female pneumatic connector.	16	(P2) Female pneumatic connector Pneumatic input for pressure measurements.

* A maximum of 3 extensions, each 10 ft (3 m) long, can be connected between these inputs and the smoke sampling probe.
These extensions increases the response time of the instrument by about 5 s for each meter of extension and consequently the pump decreases its performace by 10mbar for each 10 ft (3 m) extension.

6.0 USING THE FLUE GAS ANALYSER

6.1 Preliminary operations

Remove the instrument from its packing and check it for damage. Make sure that the content corresponds to the ordered items. If signs of tampering or damage are noticed, notify that to the Seitron Americas service center or agent immediately and keep the original packing
The serial number and model of the instrument are shown in the data plate of the instrument.
This serial number should always be kept in mind when requesting technical assistance, spare parts or clarification on the product or its use.
Seitron maintains an updated database for each and every instrument.
Before using the instrument for the first time, we recommend you charge the batteries completely.

6.2 Analyzer power supply

The instrument contains an high-capacity Li-Ion rechargeable battery.
If the battery it is too drained to perform the measurements, the instrument can be connected to mains power using the provided power pack, so to allow it to operate and proceed with the analysis.
The battery will be recharged whilst the instrument is being used.
The battery charging cycle takes up to 6 hours for a complete charge and finishes automatically.

WARNING
If the instrument is not going to be used for a long time (e.g. summer) it is advised to store it after a complete charging cycle; furthermore, perform a complete charging cycle once every 3 months.

6.2.1 Internal battery charge level

The display constantly shows the status of the internal battery, through the symbol at the top right of the display, with the relative percentage of residual charge.

WARNING!
THE INSTRUMENT IS SHIPPED WITH A BATTERY LEVEL LOWER THAN 30% AS REQUIRED BY CURRENT AIR TRANSPORTATION STANDARDS. BEFORE USE PERFORM A COMPLETE CHARGING CYCLE OF 6 HOURS.
IT IS ADVISABLE TO CHARGE THE BATTERY AT AN AMBIENT TEMPERATURE RANGING BETWEEN 50°F AND 86°F (10°C AND 30°C)

Pay particular attention to the following symbols:

SYMBOL	BATTERY STATUS
Fast blinking (1 s)	20% residual charge - Operation remaining time 2 hours.
Fast blinking	5% residual charge - Operation remaining time 1 hour. Charge the battery.
	Charging the battery.
	Battery not connected or damaged.

The instrument can be left in stock for a period of time depending on the charging level of the battery; below there is a table showing the correlation between stock time and charging level.

BATTERY LEVEL	STOCK TIME
100%	120 days
75%	80 days
50%	45 days
25%	30 days

6.2.2 Use with external power pack

The instrument can work with the batteries fully drained by connecting the external power pack provided.

WARNING!
THE POWER SUPPLY/BATTERY CHARGER IS A SWITCHING TYPE ONE.
THE APPLICABLE INPUT VOLTAGE RANGES BETWEEN 90Vac AND 264Vac.
INPUT FREQUENCY: 50-60Hz.
THE LOW VOLTAGE OUTPUT IS 5 VOLT WITH AN OUTPUT CURRENT GREATER THAN 1.5A.
LOW VOLTAGE POWER CONNECTOR: A-TYPE USB CONNECTOR + CONNECTION CABLE WITH C-TYPE PLUG.

6.3 Power ON / OFF

INSTRUMENT STATUS	ACTION	FUNCTION
OFF (turned off)	Hold down the key indicated by the arrow for a long time (> 3 s)	The instrument turns on * and starts the automatic autozero.
ON (switched on)	Hold down the key indicated by the arrow for a long time (> 3 s)	The instrument turns off after completing the cleaning cycle for the set time.

*: At the first start, the instrument guides the user step-by-step to configure the following data:
- Language
- Country
- Time format
- Current time setting
- Date format
- Current date setting

On the start-up phase, the instrument switches on the dilution pump and opens the solenoid valve for the automatic autozero.
At the end of the autozero cycle, the instrument switches off the dilution pump and e disables the solenoid valve for automatic autozero and turns on the smoke pump.
The autozero time interval can be modified by the user from a minimum of 30 to a maximum of 600 seconds with 1 second resolution (default 60 s). During the start-up phase the instrument measures the values of:
- gas sensors
- ambient temperature T2
- smoke temperature T1

On turning off phase, the instrument starts the pneumatic circuit cleaning cycle (turns off the smoke pump and enables the solenoid valve for automatic autozero and the CO dilution pump); the display shows a countdown, and when it is over teh instrument will be turned off if the current values are found accettable below the thershold of the zero value.
The cleaning cycle is settable on the “Configuration“ parameter on the instrument home page.

6.3.1 Instrument home page

Once the instrument has been switched on, the display shows the home page screen.

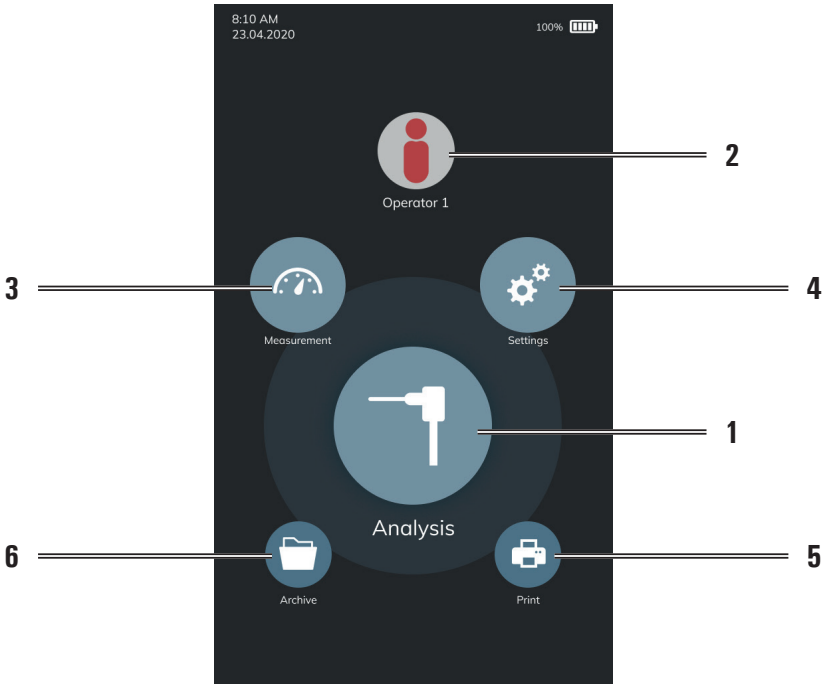

1	Carry out the complete combustion analysis. Also, access the analysis configuration menu; the user can set the different reference parameters of the instrument to carry out the combustion analysis. FOR ALL DETAILS, REFER TO CHAPTER 8.0.
2	Enters the Operator menu. It is possible to select the name of the operator who will perform the analysis, which will be printed on the analysis ticket report. FOR ALL DETAILS, REFER TO CHAPTER 9.0.
3	Accesses the Measurements menu. The user accesses all the accessory measurements that the instrument can perform. FOR ALL DETAILS, REFER TO CHAPTER 10.0.
4	Access the Configuration menu; the user can set the various reference parameters of the instrument. FOR ALL DETAILS, REFER TO CHAPTER 11.0.
5	Access the Print menu. FOR ALL DETAILS, REFER TO CHAPTER 12.0.
6	Access the Archive menu. The user views the stored measurements. FOR ALL DETAILS, REFER TO CHAPTER 13.0.

6.4 Warning

- Use the instrument with an ambient temperature between 23 °F and 113 °F (-5 and +45°C).

WARNING!
IF THE INSTRUMENT HAS BEEN KEPT AT VERY LOW TEMPERATURES (BELOW OPERATING TEMPERATURES) WE SUGGEST WAITING A WHILE (1 HOUR) BEFORE SWITCHING IT ON TO HELP THE SYSTEM'S THERMAL BALANCE AND TO PREVENT CONDENSATE FORMING IN THE PNEUMATIC CIRCUIT.

- When the testing is completed, before turning the instrument off remove the probe and let is aspirate ambient clean air for at least 30 seconds to purge the pneumatic path from all traces of gas
- After each use, before storing the instrument, check the level of condensation in the water trap / filter assembly unit and, if necessary, empty the case. Also check that the filter present is not particularly dirty or impregnated with humidity; in this case, replace it with a new one.

WARNING!
DO NOT TAKE MEASUREMENTS WITHOUT FILTER OR WITH A DIRTY FILTER TO AVOID THE RISK OF IRREVERSIBLE DAMAGE TO THE SENSORS.
DO NOT USE THE INSTRUMENT WITH THE FILTERS CLOGGED OR IMPREGNATED WITH MOISTURE AND WITH THE LEVEL OF CONDENSATION BETWEEN THE TWO NOTCHES (SEE FIGURE BELOW).

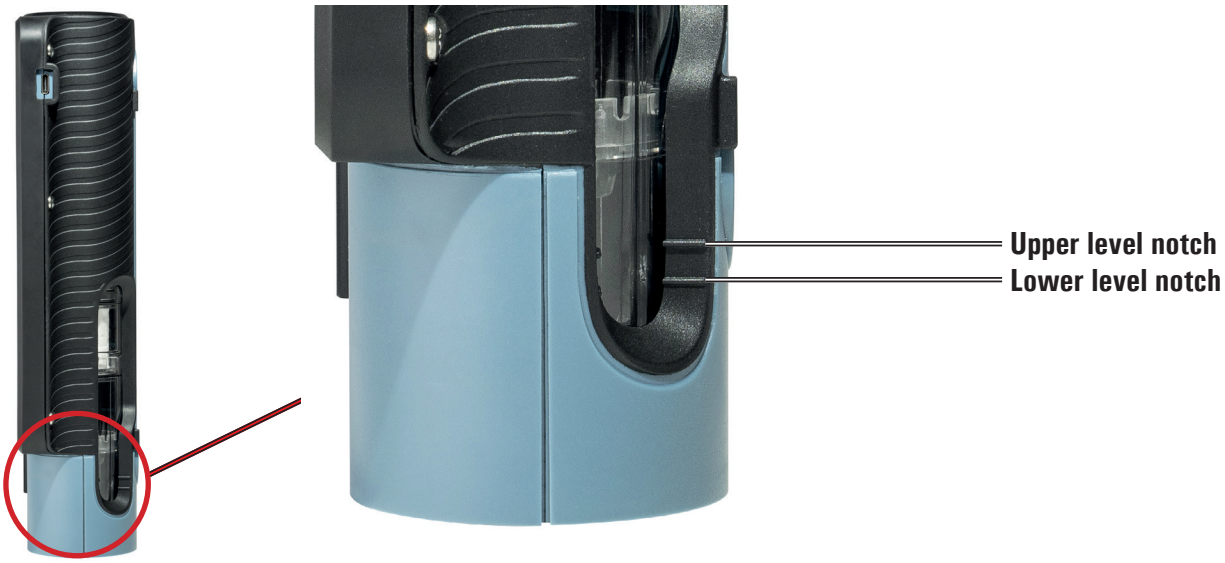

- Before putting the measuring probe back in its case after use, make sure it is has cooled down enough and there is no condensate in the tube. It might be necessary to periodically disconnect the filter and the condensate separator and blow compressed air inside the tube to eliminate all residues.
- Remember to have the instrument checked and calibrated once a year in order to comply with the existing standards.

6.4.1 Positioning of the instrument during operation

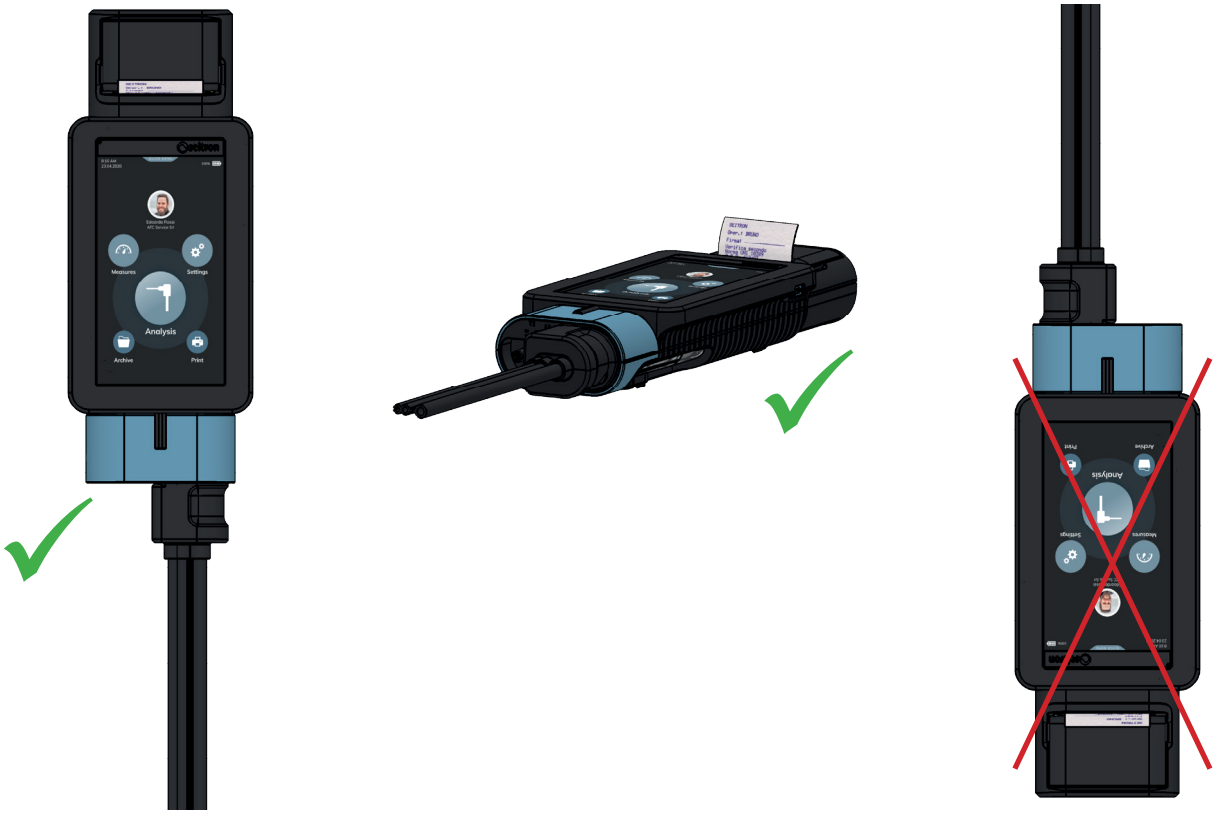

7.0 CONNECTION DIAGRAM

7.1 Flue gas and combustion air temperture probe connection diagram

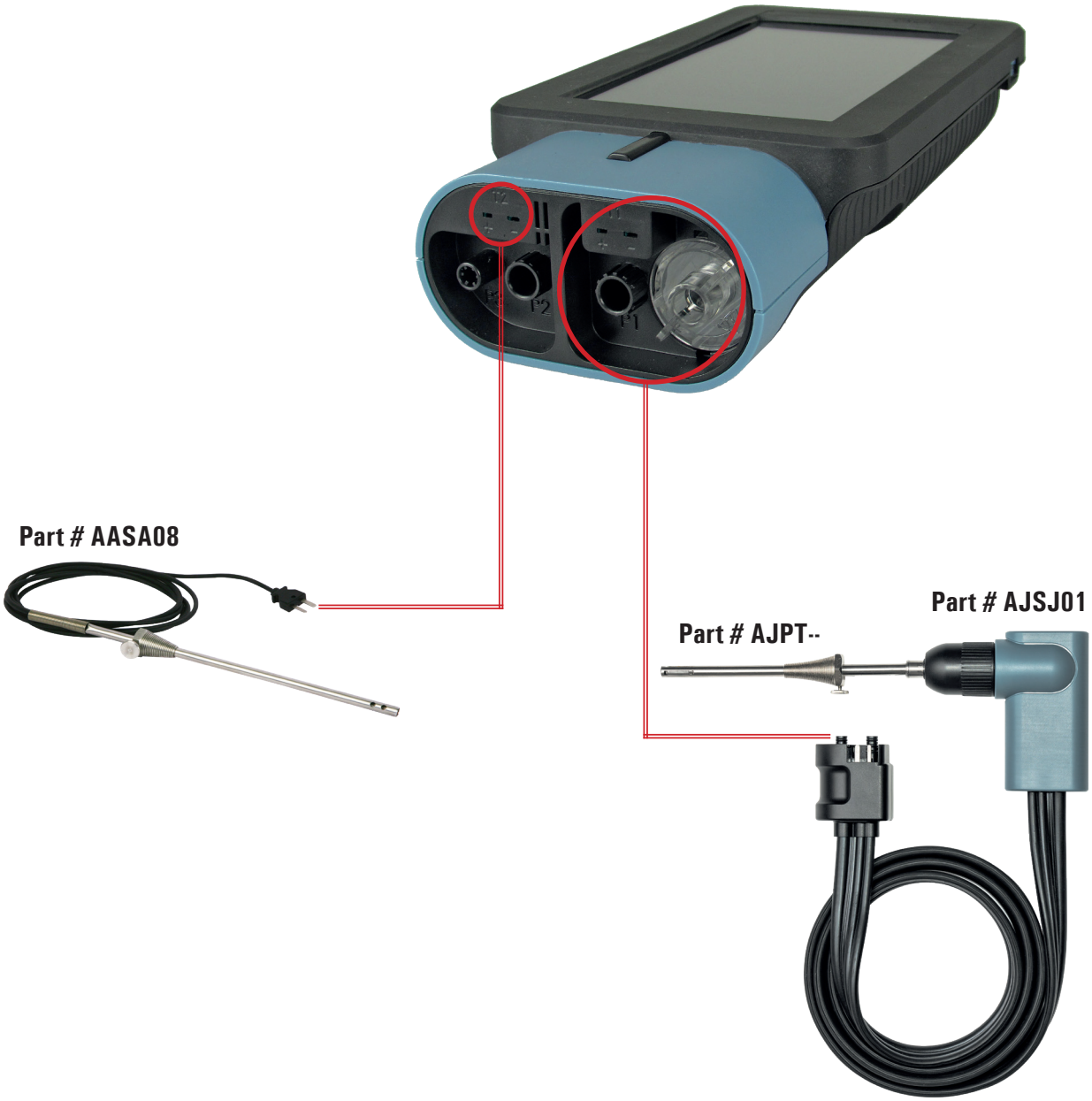

7.2 Probe connection for simultaneous pressure, O2, combustion parameters and efficiency calculation

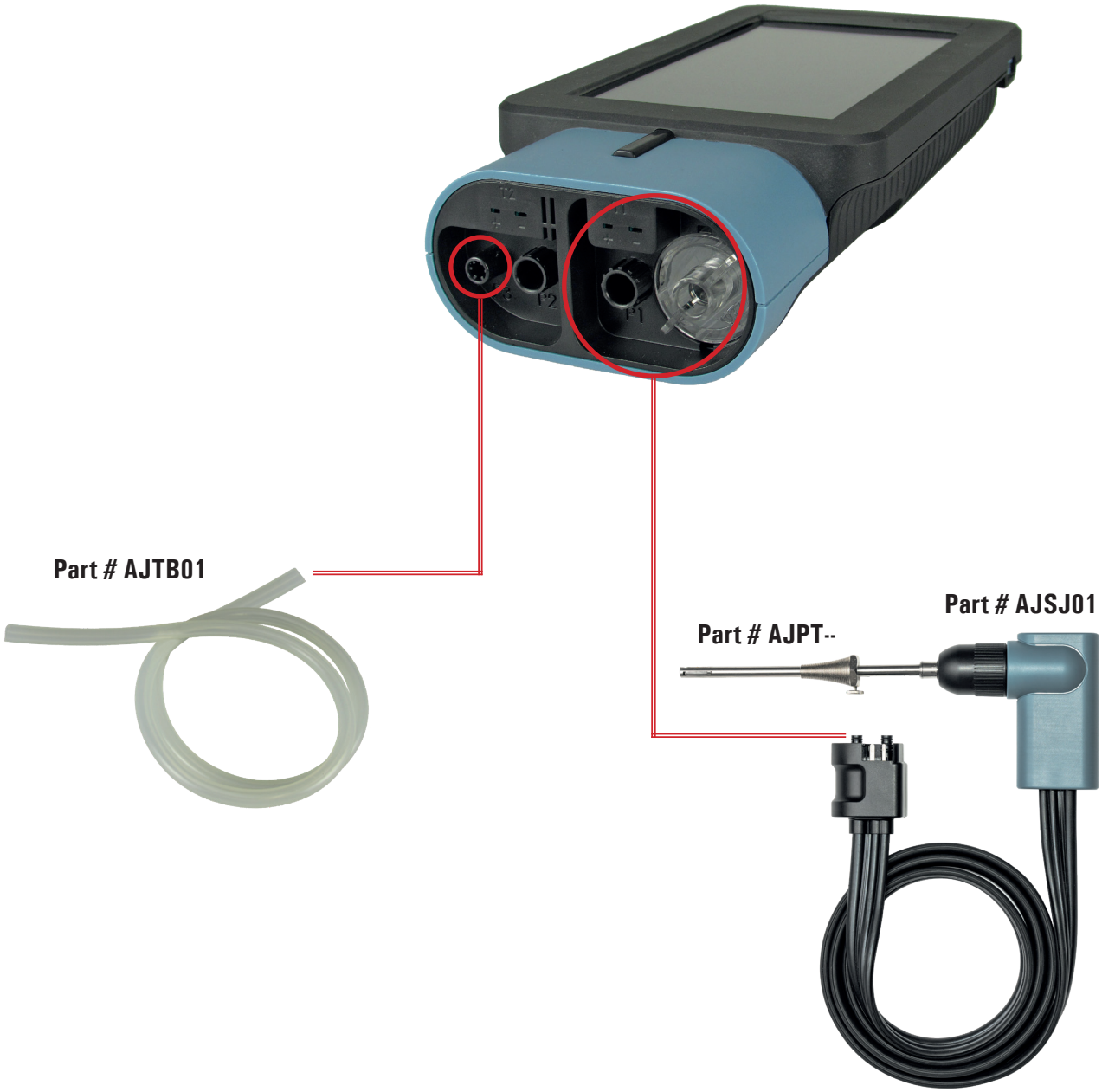

7.3 PC connection

8.0 FLUE GAS ANALYSIS

To perform complete flue gas analysis, follow the instructions below.

8.1 Warnings

WARNING!
FOR A CORRECT ANALYSIS NO AIR MUST FLOW INTO THE PIPE FROM OUTSIDE DUE TO A BAD TIGHTENING OF THE CONE OR A LEAK IN THE PIPELINE.
THE GAS PIPE MUST BE CHECKED IN ORDER TO AVOID ANY LEAKAGES OR OBSTRUCTIONS ALONG THE PATH.
CHECK THE WATER TRAP / FILTER ASSEMBLY UNIT IS SET UP CORRECTLY ON THE INSTRUMENT.
THE FLUE GAS PROBE CONNECTORS MUST BE TIGHTLY CONNECTED TO THE ANALYZER.
DO NOT PERFORM ANY MEASUREMENT WHEN THE FILTER IS REMOVED OR DIRTY IN ORDER TO AVOID ANY RISK OF IRREVERSIBLE DAMAGES ON SENSORS.
DO NOT USE THE INSTRUMENT WITH THE FILTERS CLOGGED OR IMPREGNATED WITH MOISTURE AND WITH THE LEVEL OF CONDENSATION BETWEEN THE TWO NOTCHES (SEE FIGURE BELOW).

8.2 Switching on the instrument and auto-calibration

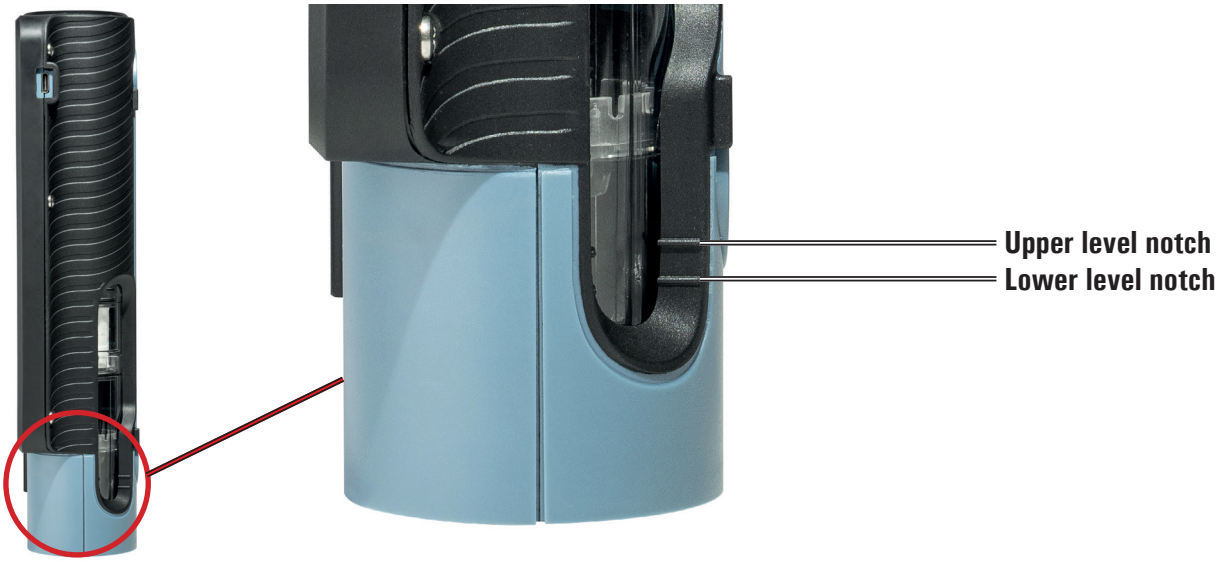

By pressing the on / off button, the instrument turns on and displays the initial splash screen.
After a few moments the instrument automatically proceeds to the autozero phase

WARNING!
THE INSTRUMENT IS FEATURED WITH A SOLENOID VALVE FOR THE AUTOMATIC AUTOZERO, SO THE AUTOZERO CAN BE PERFORMED WITH THE FLUE GAS PROBE IN THE STACK.
DURING THE AUTOZERO PHASE, THE INSTRUMENT TAKES IN CLEAN AIR FROM THE ENVIRONMENT WHERE IT IS AT THE MOMENT OF THE ANALYSIS AND DETECTS THE BASE LINE OF THE SENSORS (O2, CO, NO, ..), THE DATA OF WHICH ARE STORED FOR USE AS REFERENCE DURING THE ANALYSIS.
IT IS ALSO IMPORTANT THAT THIS PHASE BE CARRIED OUT IN AN ENVIRONMENT WITH CLEAN AIR.
DURING THE AUTOZERO THE ZERO OF THE PRESSURE SENSOR IS ALSO PERFORMED.

8.3 Inserting the flue gas probe in the stack

In order for the probe to be inserted at the right point within the stack, its distance from the boiler has to be twice the diameter of the stack pipe itself or, if this is not possible, must comply with the boiler manufacturer's instructions.
In order to position the probe correctly, a reliable support must be provided by drilling a 0,5/06" (13/16 mm) hole in the manifold (unless

already present) and screwing in the positioning cone provided with the probe - in this way no air is drawn from the outside during sampling.
The screw on the cone allows the probe to be stopped at the right measuring depth - this usually corresponds to the centre of the exhaust pipe. For greater positioning accuracy, the user may insert the probe gradually into the pipe until the highest temperature is read.
The exhaust pipe must be inspected before carrying out the test, so as to ensure that no constrictions or losses are present in the piping or stack.

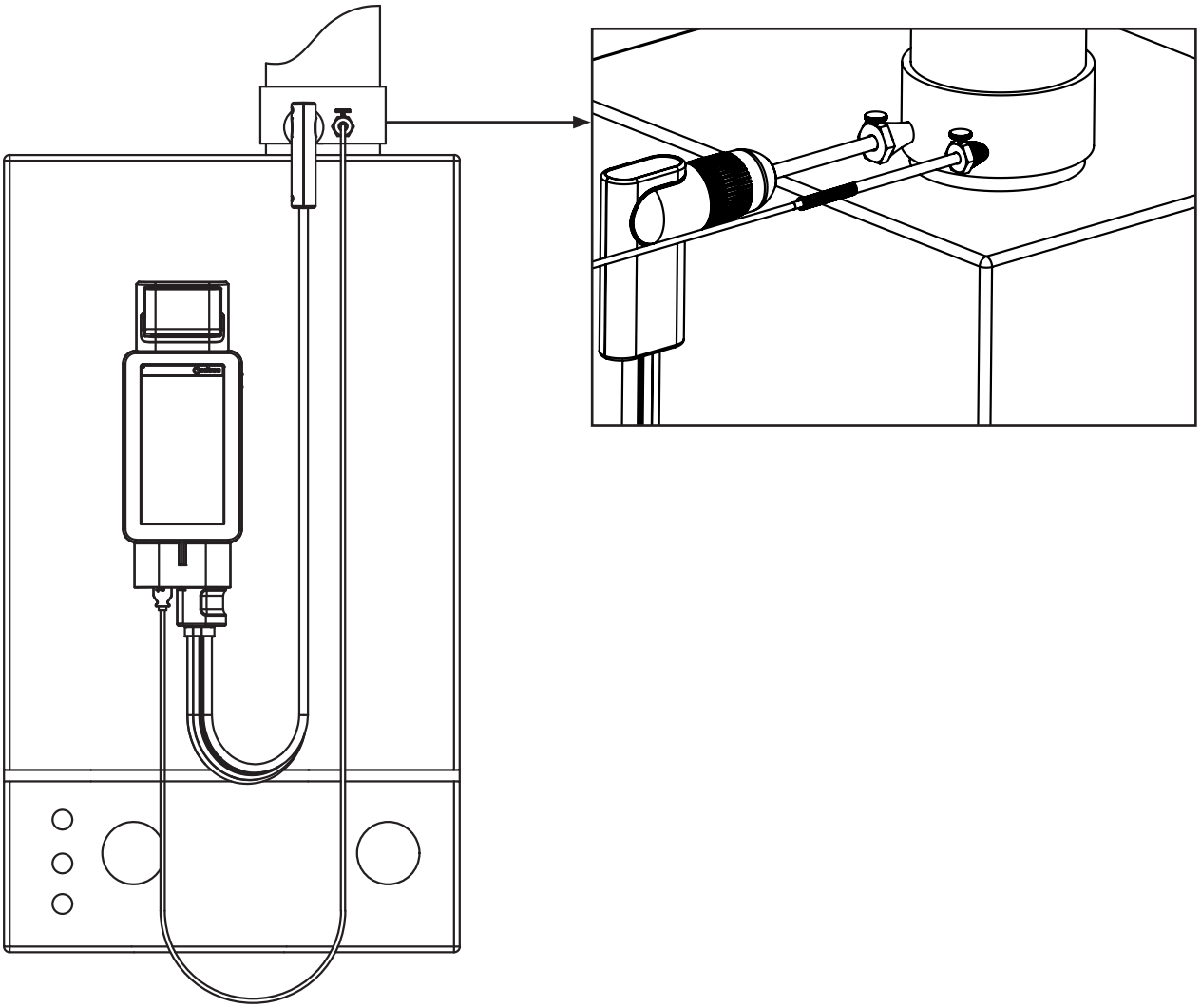

8.4 Setting the main analysis parameters

After inserting the flue gas probe in the stack and, if necessary, set up any probe to measure the combustion air temperature in the special pick-up manifold, you can proceed, if not previously done, to the configuration of the analysis mode setting the requested data:

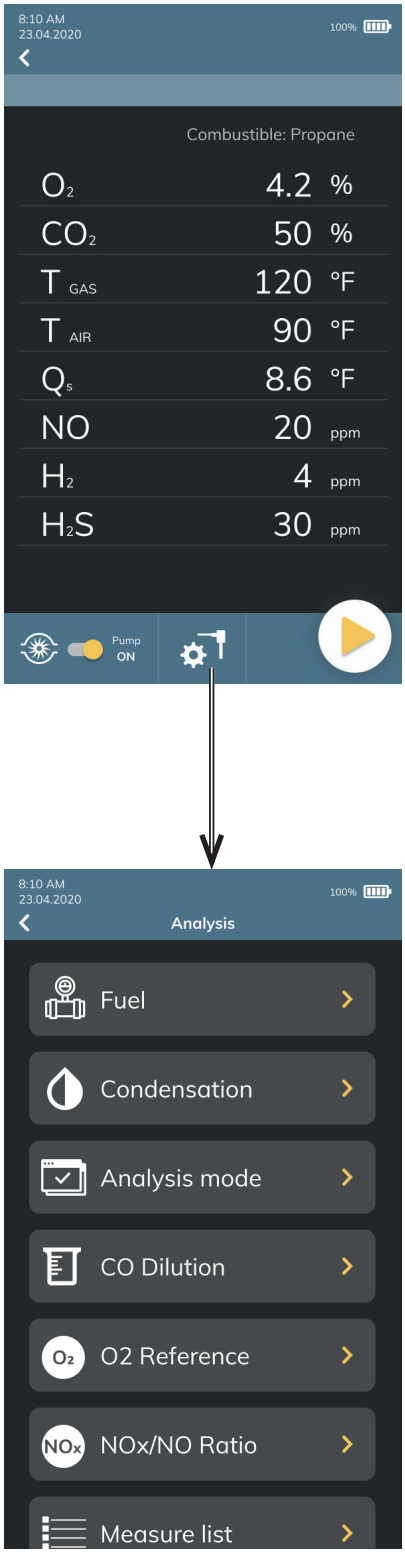

8.4.1 Analysis parameters

Through this menu the user can configure the available parameters for a proper combustion analysis.

PARAMETER	FUNCTION
Fuel	Lets the user select the type of fuel to be used during analysis. By selecting the sub menu Fuel coefficients the user can view the characteristics of the fuels used in the calculation of performance
Condensation	The burner efficiency figure when condensation takes place is influenced by atmospheric pressure and humidity of the combustion air. As the atmospheric pressure is hardly precisely known, the operator is asked to enter a related parameter, i.e. the altitude of the place above the sea level, from which the pressure is then derived once the dependency from atmospheric conditions is neglected. In calculations the value of 1 Bar (101325 Pa) is assumed as atmospheric pressure at sea level. Further the air relative humidity input is allowed, being this calculated at the combustion air temperature as measured from the instrument; in case this value is unknown the operator is recommended to enter 50% for this value.
Analysis mode	This submenu allows the user to define the mode of analysis: **Automatic analysis mode:** **data logger** This mode is entirely configurable by the user (it is necessary to set the number of samples to be acquired, the duration of acquisition of each sample and the printing mode). When the combustion analysis starts, the instrument automatically acquires the number of samples set on the special parameter, each sample separated by another by the set time. **Warning!** **In automatic mode, the measurements of smoke, draft and ambient CO must be taken before starting the combustion analysis.** **Manual analysis mode:** If the user chooses the manual mode, he will perform the combustion analysis manually; in this case, the settings regarding printing and duration of the automatic analysis will not be considered. At this point the user can start the manual analysis after waiting two minutes so that the displayed values are stable: then he can proceed to save or directly print the test ticket of the analysis, which will be prepared in accordance with the previously configured settings. At the end of the three analyses, the screen with the average can be displayed, which also contains all the data necessary to fill in the booklet of the system or plant. In both modes, manual and automatic, the data displayed regarding the pollutants CO / NO / NOx can be translated into normalized values (with reference to the concentration of O2 previously set).

CO Dilution	The CO sensor is protected by a pump which, in case of need, can inject clean air in the gas path in order to dilute the gas concentration measured by the sensor. This function can be either triggered by the overcoming of a CO concentration threshold which can be set by the user or, in case it is known that the flue gases contain high CO concentration, kept enabled any time, independently of CO concentration. **WARNING!** **CO AUTO-DILUTION FEATURE MUST ONLY BE CONSIDERED AS A MEANS OF PROTECTION FOR CO SENSOR, AS ITS ACTIVATION HEAVILY DETERIORATES BOTH ACCURACY AND RESOLUTION OF THE CO MEASUREMENT.**
O_2 reference	In this mode the user can set the oxygen percentage level to which pollutant emission values detected during analysis will be referenced.
NO/NOx ratio	NOx/NO: all the nitrogen oxides which are present in the flue emissions (Nitrogen oxide = NO, Nitrogen dioxide = NO2); total nitrogen oxides = NOx (NO + NO2). In the combustion processes, it is found out that the NO2 percentage contained in the gas is not far from very low values (3%); hence it is possible to obtain the NOx value by a simple calculation without using a direct measurement with a further NO2 sensor. The NO2 percentage value contained in the gas can be however set at a value other than 3% (default value).
Measure list	In this submenu it is possible to: - display the list of measurements made by the instrument - enable or disable a measure - move a selected measure in a different position in the list
Air temperature	In this submenu there is a possibility to acquire or manually enter the combustion air temperature.

8.5 Start and end of the combustion analysis in manual mode

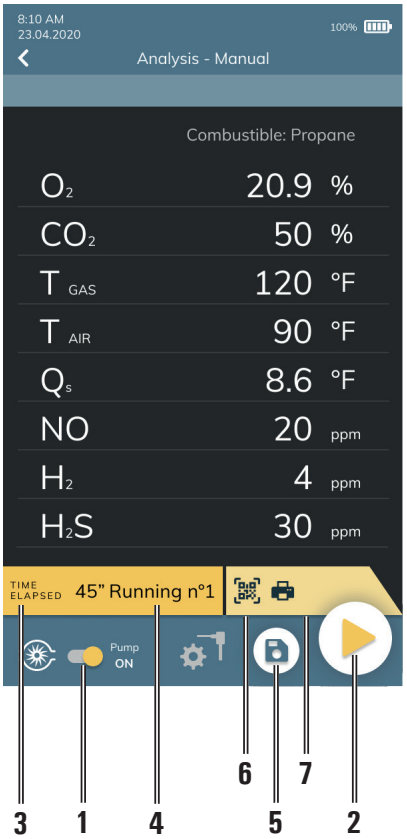

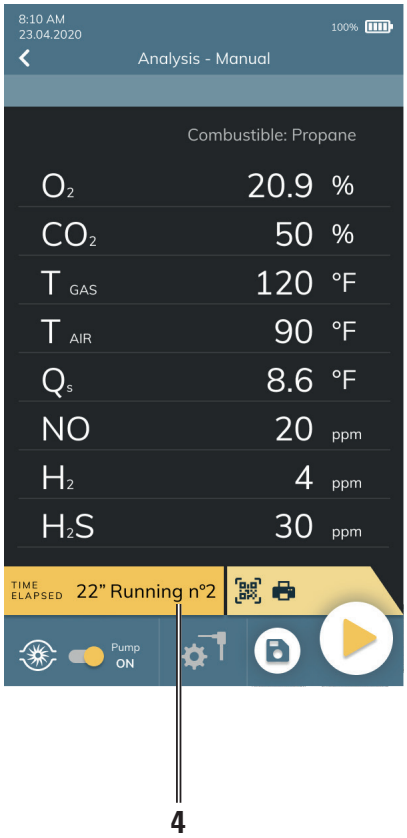

1	Turns on / off the sampling probe. If the pump is switched off, the refresh of the current measures is freezed.
2	Pressed for the first time it starts the analysis, but it doesn't acquire any measure. When it is pressed afterwards, at each press acquires the current measure.
3	TIME ELAPSED: Time passed from the last pressure of the key "2".
4	Running n°-: indicates the measure number which will be acquired at the next pressure of the key "2".
5	Stores the acquired memories. If this key is pressed before acquiring at least one measure, the instrument is not going to store anything.
6	View the QR code relating to the analysis performed on the display.
7	Start the printing of the performed analysis, according to the settings made in the appropriate dedicated parameter on the home page.

8.6 Starting the combustion analysis on automatic mode (Data Logger mode)

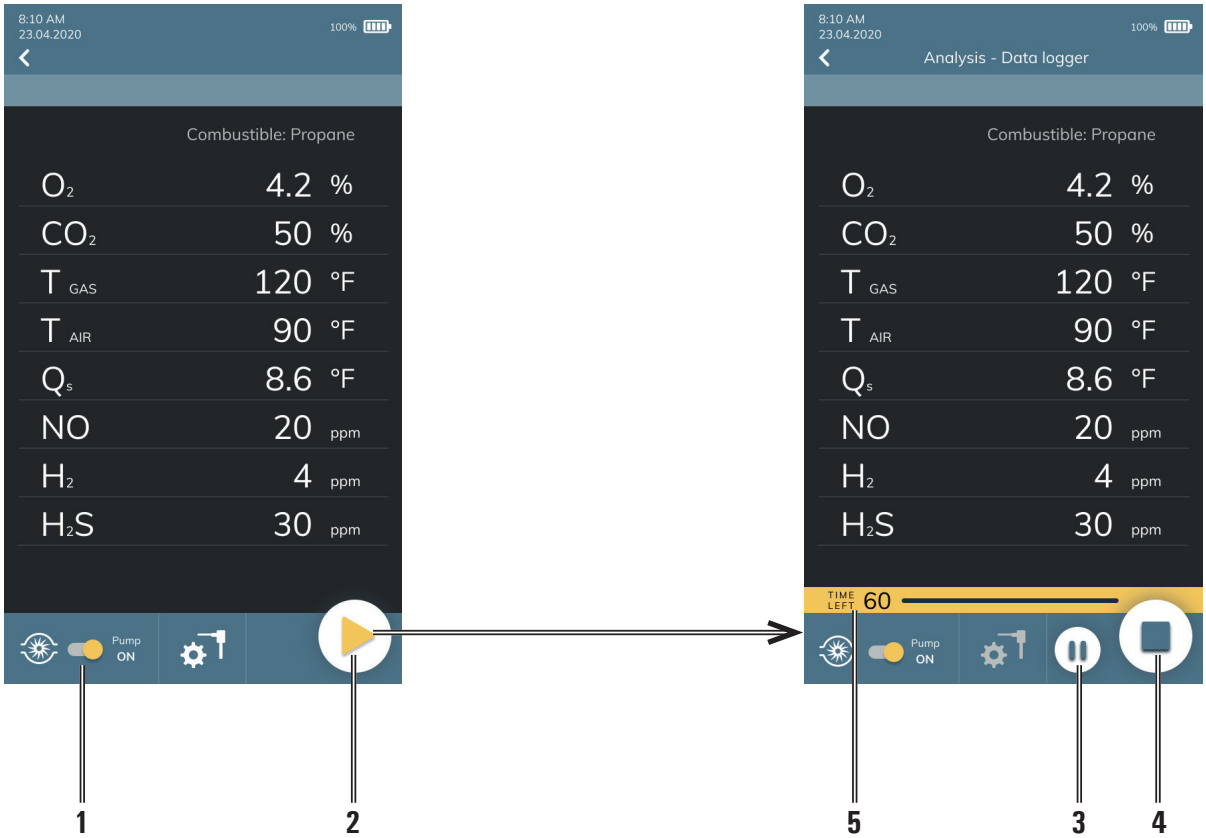

1	Turns on / off the sampling probe. If the pump is switched off, the refresh of the current measures is freezed.
2	Starts the combustion analysis in accordance with the set analysis parameters.
3	Pause the current analysis.
4	Interrupts the current combustion analysis and goes back the starting page.
5	TIME LEFT: Time remaining for the acquisition of a new measurement.

8.6.1 Ending the combustion analysis on automatic mode (Data Logger mode)

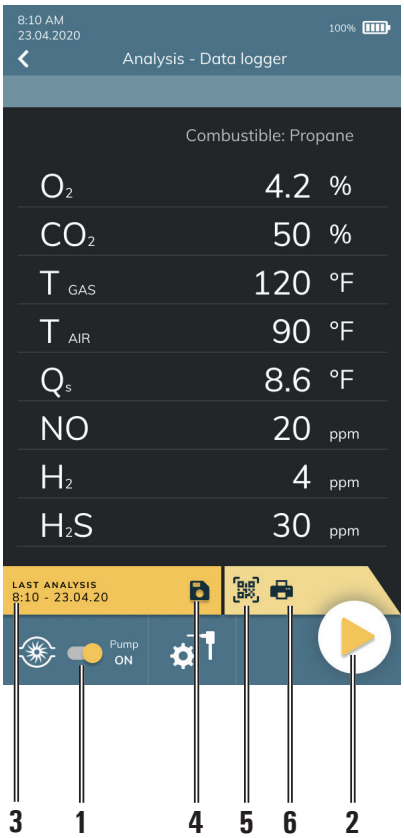

1	Turns on / off the sampling probe. If the pump is switched off, the refresh of the current measures is freezed.
2	Starts the combustion analysis in accordance with the set analysis parameters.
3	LAST ANALYSIS: Date and time of the last performed analysis.
4	Stores the performed analysis.
5	View the QR code relating to the analysis carried out on the display.
6	Start the printing of the performed analysis, in accordance with the settings made in the appropriate dedicated parameter on the home page.

8.7 End of analysis

- At the end of the combustion analysis, carefully remove the sample probe and remote air temperature probe, if used, from their relative ducts, taking care not to get burnt.
- Switch off the instrument by pressing the On/Off key.
  At this point, if the instrument has detected a high concentration of CO and/or NO, a self-cleaning cycle will be initiated during which the pump will draw fresh outside air until the gas levels drop below acceptable values.
  The duration of the cleaning cycle depends on the setting made in the Configuration menu.
  Note: However, it is always advisable to purge the instrument with clean air for at least 5 - 10 minutes, before turning it off and in any case check that the measured value is lower than 20ppm.

WARNING!
WHEN THE FLUE GAS PROBE IS TAKEN OUT OF THE STACK, THERE COULD FORM SOME CONDENSATION INSIDE THE PROBE HOSE AND INSIDE THE WATER TRAP / FILTER ASSEMBLY UNIT.
IT IS ADVISED TO CLEAN ACCURATELYALL THE DIFFERENT PARTS BEFORE STORING THE INSTRUMENT AND THE PROBE IN THE CASE.
TO AVOID DAMAGING THE INSIDE OF THE CASE, MAKE SURE THE METALLIC PART OF THE PROBE IS AT A TEMPERATURE LOWER THAN 140 °F (60 °C).

8.7.1 Checking the water trap / filter assembly

The water trap / filter assembly unit is integrated with the instrument, but it is removable in order to empty the water in the water trap and the filter replacement operations.
Considering that an analysis lasts on average 20/30 minutes, the autonomy of the water trap can be considered as about 6/8 complete analyses without necessarily having to empty the water trap unit each time.
However, it is a good rule to empty the water trap unit at the end of each complete analysis or at least every 2 - 3 complete analyses.
In this condition, if the instrument is placed in the suitcase, there is no possibility that the water leaks towards the inside.

WARNING!
CHECK AND EMPTY, AT THE END OF EVERY ANALYSIS, ANY PRESENCE OF WATER INSIDE THE TANK FOR CONDENSATION DRAINNIG COLLECTION. STORE THE INSTRUMENT INSIDE THE CASE JUST AFTER EMPTING THE WATER FROM THE WATER TRAP.

REPLACE THE FINE DUST FILTER IF IT IS VISIBLY DIRTY OR WET (SEE CHAPTER 'MAINTENANCE'). DO NOT PERFORM ANY MEASUREMENT WHEN THE FILTER IS REMOVED OR DIRTY IN ORDER TO AVOID ANY RISK OF IRREVERSIBLE DAMAGES ON SENSORS.

9.0 OPERATOR

In this menu you can select the operator who carries out the combustion analysis or other measurements, which will be saved and / or printed on the analysis report.

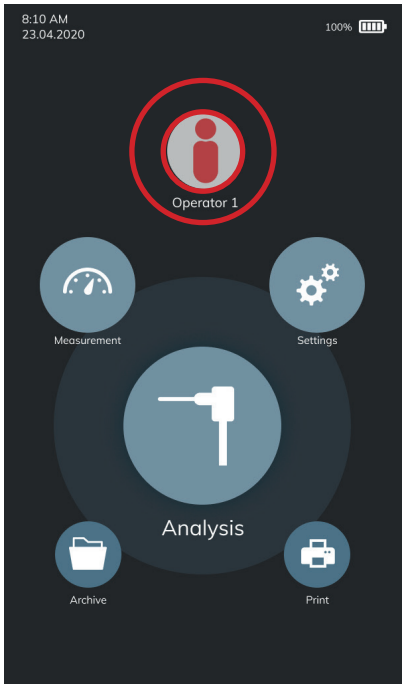

The menu, which cannot be modified by the user, has 5 generic operators associated with an avatar.
It will be the customer's responsibility to match the operator's name to the relevant avatar in the menu.

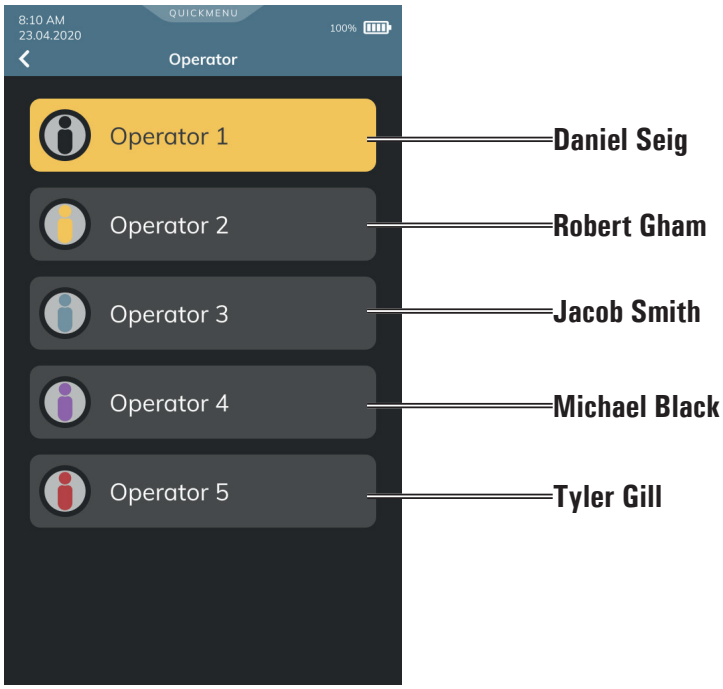

10.0 MEASUREMENTS

This combustion analyzer is able to perform several other measurements, accessible from the home page of the instrument in the "Measurements" menu.

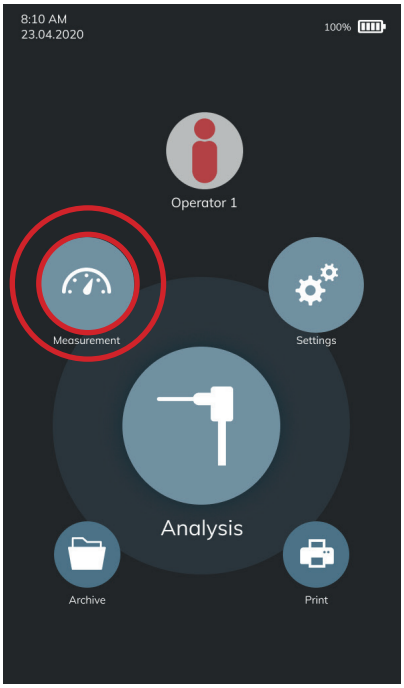

MEASURE	REFERENCE CHAPTER
Draft	10.1
Smoke test	10.2
Ambient CO	10.3
Temperature	10.4
Pressure	10.5
P gas	10.6

10.1 Draft measurement

This menu allows you to measure the stack draft.

WARNING!
The measurement may not be accurate due to condensation inside the gas probe.
Should you notice an inaccurate or unstable reading on the instrument, it is advisable to disconnect the gas probe from the instrument itself, and purge pipes by blowing with a compressor. In order to be sure there is no humidity, it is suggested to perform the measurement by means of the transparent rubber pipe supplied on issue.

To measure the draught proceed as follows:
- Connect the flue gas probe to the instrument (see chapter "Connection diagrams").
- Perform the zero pressure; it is not necessary to remove the probe from the stack.
- Measure the draft.
- Save the measurement and / or proceed with printing on the report.

WARNING!
If you want to have the draft measurement in the same combustion analysis report, you must first perform the draft measurement and then, through the guided procedure, proceed with the combustion analysis.

10.2 Smoke measure

It is possible to enter the data concerning one to three CARBON BLACK measurements taken by means of an optional device (BACHARACH PUMP); see the relevant instructions. The method consists in taking a certain quantity of combustion gas from the middle of the flue behind the surfaces of the exchangers at the end of the boiler, and make it pass through a special filter paper. The soot stain obtained is compared with the surfaces blackened in a different way according to a comparison scale; it is thus determined the “soot number”, which will be entered in the instrument by hand. The measures can be saved and/or printed on a ticket.

10.3 Ambient CO measaure

This type of analysis lets the user measure the CO value present in the environment, with the scope of checking the personal safety conditions of a specific working environment. The instrument leaves our factory with the following pre-set threshold values:

COmax: 35 ppm Recommended exposure limit (REL) stipulated by the National Institute for Occupational Safety and Health (NIOSH), equivalent to 40 mg/m3 and calculated as an 8-hour Time-Weighted Average (TWA).

WARNING!
It is compulsory to perform the autozero in the clean air, so that the ambient CO measurement is correct. It is advisable to turn on the instrument and wait for the autozero completion outside the area where the test is being performed.

10.4 Temperature measure

With this menu it is possible to measure the temperature of the supply water, by means of an OPTIONAL thermocouple K-type contact probe to be connected to the input T1.
Also, it is also possible to measure the temperature of the return water, by connecting an OPTIONAL thermocouple K-type contact probe to be connected to the input T2.
With the function ΔT it is possible to obtain the relative temperature difference.

10.5 Pressure measure

It is possible, using the smoke probe, to measure the pressure within the range indicated on **P1** at chapter **18 “Measurement and accuracy ranges.**

10.6 “P gas” Measures network gas pressure

It is possible, using an external tube, to connect to **P3** input and measure the inlet pressure of the network gas within the range set on P3 at chapter **18 “Measurement and accuracy ranges.**

11.0 SETTINGS

The configuration menu is featured with all the reference parameters of the instrument, the information about the instrument status and the diagnostic, in order to check any anomalies.

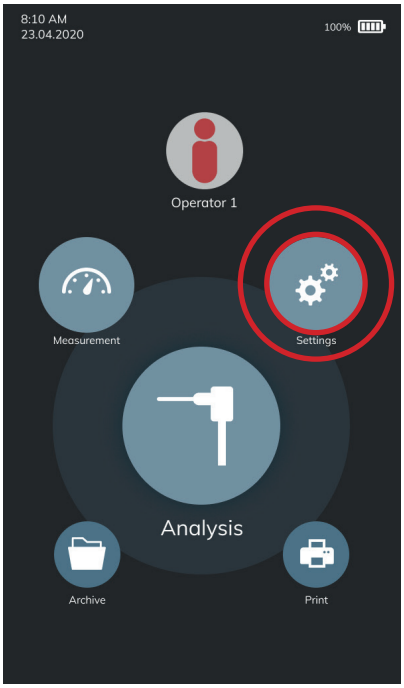

PARAMETER	REFERENCE CHAPTER
Instrument	11.1
Operator	11.2
Information	11.3
Diagnostic	11.4
Autozero	11.5

11.1 Instrument configuration

11.1.1 Bluetooth®

Through this sub menu the user can turn on and off the instrument Bluetooth® wireless and visualize the MAC address of the instrument.
When the Bluetooth® is powered, on the "" icon is shown on the diasplay.

WARNING!
WHEN THE INSTRUMENT BLUETOOTH INTERFACE IS TURNED ON, THE BATTERY LIFE IS REDUCED DOWN TO 10 HOURS.

11.1.2 Time/Date

This allows the current time and date to be set. The user can select the date and hour format.

11.1.3 Brightness

This submenu allows to adjust the brightness of the display.

11.1.4 Language

Sets the instrument language.

11.1.5 Country

Selecting a different country from the one selected at the first startup of the instrument, will automatically change the time format and language.

11.1.6 Restore

Through this parameter it is possible to restore the instrument default settings.

WARNING !
BY SETTING THE INSTRUMENT TO DEFAULT, ALL THE STORED MEASURES WILL BE ERASED.

11.2 Operator

In this menu it is possible to select the operator who will perform the combustion analysis or other measures, and that operator is reported on the tickets and/or stored in the instrument memory.
The menu, which cannot be changed by the user, has 5 generic operators associated with an avatar.
It will be the customer's responsibility to match the operator's name to the relevant avatar in the menu.
This menu is also accessible directly from the instrument's home page.

11.3 Information

View information about the help center.

11.3.3 Infoservice

This submenu contains details regarding the nearest Service Center to be contacted in the event of instrument fault or ordinary maintenance. The instrument model, serial number and firmware version are also displayed, thus allowing for a quick product identification.
In addition, the status of the memories and calibration of the instrument is displayed.

11.4 Diagnostic

The user, through this menu, can check any instrument anomalies.

11.4.1 FW update

This menu is not accessible by the user because it is strictly reserved for the assistance centers.

11.4.2 Maintenance

The parameters in this menu are not accessible to the user as they are for the exclusive use of the assistance centers.

11.4.3 Pump

In this submenu the user can temporarily turn the gas suction pump on or off.
Also, it is possible to view the actual flow rate of the pump in litres per minute. It will not be possible to turn off the pump during an autozero cycle.

11.4.4 On site calibration

It is possible to make a recalibration of the instrument's gas sensors with suitable known concentration gas cylinders.
For the sensors which are sensitive to other gases, called interfering gases (for example SO2), it is possible to perform the on-site calibration also for the related interfering gas.
The access to the sensor recalibration is password protected, the password is ' 1111 '.

Calibration procedure
In order to perform the calibration, the following tools are needed:
- Known concentration gas cylinder suitable for the sensor, complete with a pressure regulator.

WARNING!
For the oxygen sensor on site calibration, the zero value calibration must be carried out with nitrogen or any other gas mixture which DOES NOT contain oxygen.

- Flow meter.
- Hose with ' T ' shaped junction, in order to connect the cylinder to the instrument and the flow meter.

Following, the suggested stabilization times for the sensors on-site calibration.
O_2 sensor: from 2 to 3 minutes
CO sensor: from 3 to 5 minutes
NO sensor: from 3 to 5 minutes
SO_2 sensor: from 5 to 8 minutes
NO_2 sensor: from 5 to 8 minutes
CxHy sensor: from 3 to 5 minutes
CO_2 sensor: from 3 to 5 minutes
NH_3 sensor: from 2 to 3 minutes
H_2 sensor: from 2 to 3 minutes
H_2S sensor: from 2 to 3 minutes

1. Start the instrument

WARNING!
- **Make sure autozero is execute in clean air and terminates correctly.**
- **Do not connect the gas probe to the instrument.**
- **Check the battery charge level or connect the power adapter to avoid data loss during recalibration.**

2. When the autozero is over, enter the "Cal. on site" menu.

3. Once in the 'On site calibration' menu, is shown the list of the installed sensors for which the recalibration is available.

By selecting a sensor, on the recalibration screen are shown all the information related to the latest calibration.

DATA	FUNCTIONALITY
Calibrate	saves new calibration
Status	not active: returns to the factory calibration active: returns to the last calibration made by the user
----	no 'on site calibration' has been previously stored
Elapsed time	timer
Applied gas	enters the concentration of the applied calibration gas
Measured gas	measures the concentration of the applied gas
Is	'Is' current from the sensor
Ia	'Ia' current from the sensor (available only on the CO sensor calibration)

CHOOSE THE SENSOR TO BE CALIBRATED AND DO AS FOLLOWS

4. Connect the known concentration gas cylinder to the instrument as shown in the following diagram:

WARNING!
Adequate ventilation must be provided when working with toxic gases, particularly the flow meter and instrument outputs must be evacuated by a ventilation system.

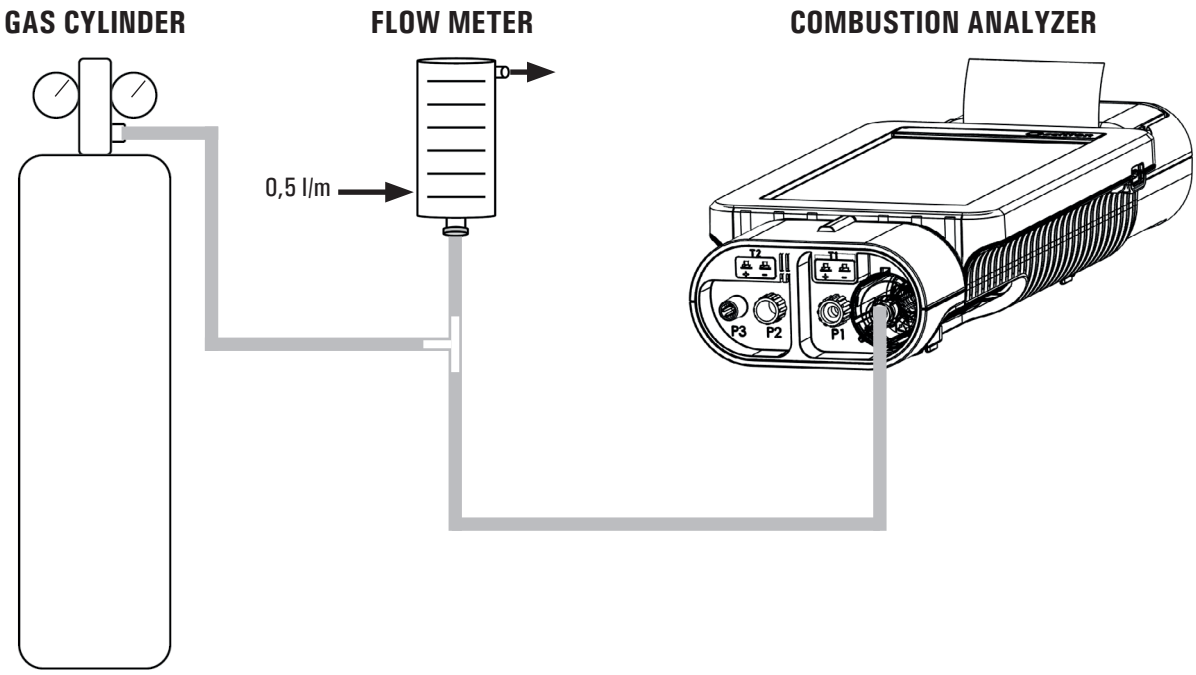

OXIGEN SENSOR (O_2) CALIBRATION DETAIL

5. The calibration **is possible** only when the status is set to '----' (sensors that have never been calibrated before) otherwise it is necessary to set the status on '**non active**' (see example below).

6. Apply gas to the instrument and adjust the output pressure of the gas from the cylinder so that the flow meter indicates a **minimum flow of 0.5 l/m**: : this guarantees that the instrument is taking the exact amount of gas required by the internal pump.

7. The instrument measures the concentration of gas applied; wait at least 3 minutes to allow the reading to stabilize. The reading is shown in line 'Gas measured'.

8. When the stabilization time is over, select the row 'Calibrate' and store the new calibration.

Stores the new calibration, the possible temporary messages visible on the 'Status' row are the following:

DATA	FUNCTIONALITY
saving	the instrument is saving the performed calibration
error	the sensor has NOT been recalibrated for any of the following reasons: - The calibration gas cannot properly reach the instrument. - Concentration for the calibration gas has not been set in the relevant line 'Applied gas'. - The user didn't allow for the stabilization time to properly elapse. - The sensor could be damaged or exhausted and must therefore be replaced.

WARNING!

- At any time the user can restore the factory calibration in the instrument by setting the 'Status' line on 'not active'.
- The advised stabilization time for the on-site calibration of the sensors, is 3 minutes.

SENSOR CALIBRATION DETAIL FOR TOXIC GASES (EXAMPLE REFERRED TO CO)

5. **The calibration is possible only when the status is set to '----'** (sensors that have never been calibrated before) **otherwise it is necessary to set the status on 'non active'.**
6. **Enter the value of the concentration of the gas applied.**
7. **Apply gas to the instrument and adjust the output pressure of the gas from the cylinder** so that the flow meter indicates a **minimum flow of 0.5 l/m:** this guarantees that the instrument is taking the exact amount of gas required by the internal pump.
8. **The instrument measures the concentration of gas applied; wait at least 3 minutes** to allow the reading to stabilize. The reading is shown in line 'Gas measured'.
9. **When the stabilization time is over, select the row 'Calibrate'** and store the new calibration.

Stores the new calibration, the possible temporary messages visible on the 'Status' row are the following:

DATA	FUNCTIONALITY
saving	the instrument is saving the performed calibration
error	the sensor has NOT been recalibrated for any of the following reasons: - The calibration gas cannot properly reach the instrument. - Concentration for the calibration gas has not been set in the relevant line 'Applied gas'. - The user didn't allow for the stabilization time to properly elapse. - The sensor could be damaged or exhausted and must therefore be replaced.

WARNING!

- At any time the user can restore the factory calibration in the instrument by setting the 'Status' line on 'not active'.
- The recommended stabilization time for on-site calibration of the sensors is 3 minutes.

For NO2 and SO2 sensors this time can be up to 5 minutes.

SENSOR CALIBRATION DETAIL FOR TOXIC GASES WITH INTERFERING GASES

The sensors for toxic gases with interfering gases are those sensors which are sensible to other gases.
The on-site calibration for these sensors allows to calibrate also the interfering gases.

The on-site calibration procedure for these sensors is the same described on the previous pages regarding the toxic gases and can be performed for all the interfering gases of the sensor itself.

Follow the instructions on the display carefully.

WARNING!

- **The stabilization time advised for the on-site calibration of these sensors is 5 minutes.**
- **When on analysis phase, the interfering gases are compensated only if on the instrument is also installed the sensor for the correspondent interfering gas.**

11.4.5 Sensors

This menu is protected by a Password. The user password is the following: "**1111**".
This menu shows the four positions of the sensors. On each position is shown the kind of installed sensor, any error and the symbol " " to access more information on the selected sensor.
For example, if the instrument shows "S1: CO" it means that on position 1 the CO sensor is installed.

For each sensor installed it is possible to access the related identification data:

DATA	DESCRIPTION
Gas	Gas detected by the sensor.
Type	Sesnor revision index.
Measure range	Sensor measuring range.
Serial	Serial number of the sensor.
Is	'Is' sensor current.
Ia	'Ia' sensor current (present only for the CO sensor).

In addition, any errors on the status and calibration of the electrochemical sensors installed on the instrument are displayed:

ERROR	DESCRIPTION	ACTION
Unkn. sens.	The instrument does not recognize the newly installed sensor.	It is necessary to update the FW of the instrument.
Wrong position	The sensor has been installed on a wrong position or the sensor detected is different from the one previously installed.	Install the sensor in the correct position.
Generic error	Gas sensor error.	Contact the service center.
Not allowed	The installed sensor has not been approved by a service center.	Contact the service center.

11.4.6 Leak test

Tests the tightness of the gas probe pneumatic path.

To proceed with the leak test of the gas probe, proceed as indicated in the following points:

1. Connect the flue gas sampling probe and filter unit assembly to the instrument;
2. Fully insert the black rubber cap on the gas probe tip, as shown in the following picture:

3. Follow the directions on the display.
4. At the end of the procedure the instrument shows the **test results**:

   Tight: The system is OK.

   Error: The system has a leak.
   Check that the probe is tightly connected to the instrument, check the gaskets of the pneumatic connectors and/or the gaskets of the water trap / filter assembly and check that the special black cap is well inserted on the probe.
   WARNING: the tip of the probe, if damaged, might distort the test.

11.5 Autozero

In this submenu you can change the duration of the analyzer autozero cycle and the duration of the automatic cleaning cycle.

11.5.1 Autozero

In this submenu you can change the duration of the analyzer autozero cycle, expressed in seconds.

11.5.2 Cleaning

In this submenu you can change the duration of the pneumatic circuit automatic cleaning cycle, expressed in seconds.
According with the duration set in this parameter, when the instrument is switched off, the cleaning cycle is performed during which the instrument sucks in clean air until the concentration of toxic gases is reduced.

12.0 PRINT

The analyzer can print a report ticket with the results of all the preformed measures, according to the settings made in this menu.
The printing is carried out with the internal printer module, if the instrument is provided with it, or using an external printer with Bluetooth® communication.

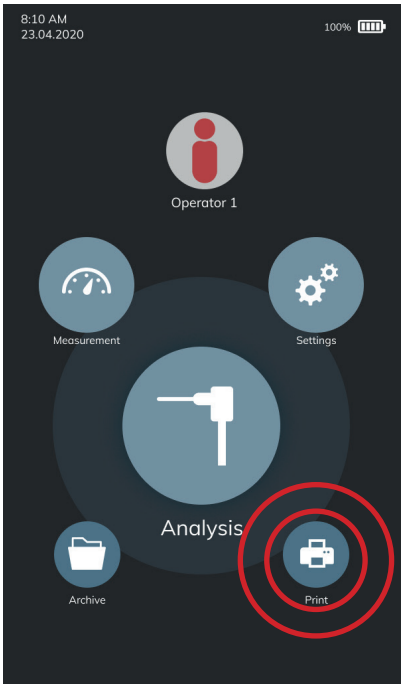

PARAMETER	REFERENCE CHAPTER
Printer	12.1
Configuration	12.2
Measurement list	12.3
Print test	12.4
Paper feed	12.5

12.1 Printer

Allows to choose the kind of printer, internal (Int) or external (Ext) with Bluetooth® communication.
If you choose the external printer will be necessary to perform the pairing procedure to pair the Bluetooth® printer to the instrument.

12.1.1 Pairing BT

Through this sub menu, the user can access to the association procedure between the instrument and a Bluetooth® printer.
The pairing procedure has to be done only once.

1. Enter the menu Pairing BT, turn on the printer which you want to connect to the instrument.
2. Select the line corresponding to the desired Bluetooth® printer.
3. The instrument automatically associates the selected printer.
4. The display shows "Device connected"; the operation is completed.
5. Return to the previous screen.

WARNING!
- **It is possible to associate multiple Bluetooth® printers to the instrument, following the procedure described above.**
- **If more than one Bluetooth® printer has been associated with the instrument, it is necessary to select the printer that will be used for printing the tickets.**

12.2 Configuration

The user, by means of this menu, can configure the test report format.

12.2.1 Header

It allows the user to enter, in eight lines of 24 characters the name of the Company or owner of the device or the information regarding the latter (e.g. address, telephone number), which will be printed in the header of the analysis report.

12.2.2 Contrast

Allows to set the print quality of the tickets (minimum 1 - maximum 7).

12.2.3 Copies*

Allows you to define the number of copies that will be printed.

12.2.4 Report*

The paper print-out layout selection is only valid for combustion analysis.
Paper print-outs for draft, smoke, ambient gas concentration and tightness test only allow a specific layout.

Layouts options for combustion analysis are specified as described in the following:

Full: includes a header with company data as well operator data previously programmed in the configuration menu, measurements sampled in the combustion analysis and, when sampled, the draft values.

Total: prints full print-out of average values with individual test data and, when sampled, the draft values.

Partial: (Default) only reports the combustion analysis measurement values and information, without any header, comments or blank lines for operator comments.

12.2.5 Date/Time*

It allows you to define whether or not to print the date and time at which the combustion analysis was performed:

Manual: The date and time are not printed in the header of the analysis report. It is the responsibility of the operator to enter the data manually.

Auto: The date and time are printed in the header of the analysis report.

*** Parameter visible only if the version of the instrument provides it.**

12.3 Measurement list

In this submenu it is possible to show the list of the measures which the instrument can perform and which will be printed on the tickets, if enabled.
If a measurement is disabled it will not be printed even if acquired in the combustion analysis phase.
Another important function available in this submenu, is sorting the list of measurements using the appropriate interactive function.

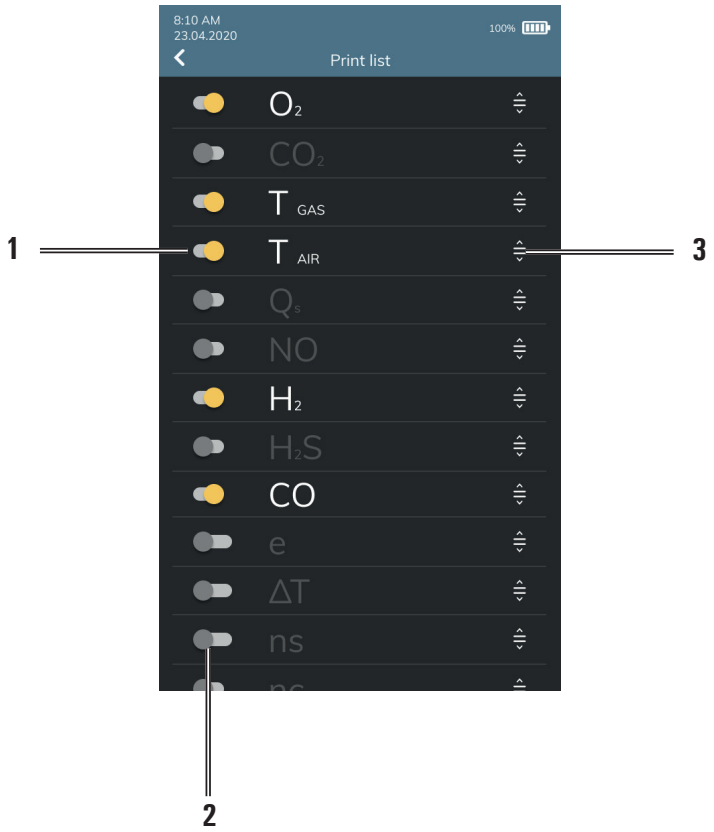

1	**Measurement enabled - will be printed on ticket.**	2	**Measure disabled - it will NOT be printed on ticket.**
3	**Shifts the measurement position.**		

12.4 Print test

Prints a graphical/alphanumeric test ticket for a complete check of the printer operation.

12.5 Paper feed

Feeds paper in the printer; this function is most useful when replacing the paper roll in the printer.

13.0 ARCHIVE

All the performed combustion analyses/measures are saved in the instrument archive.

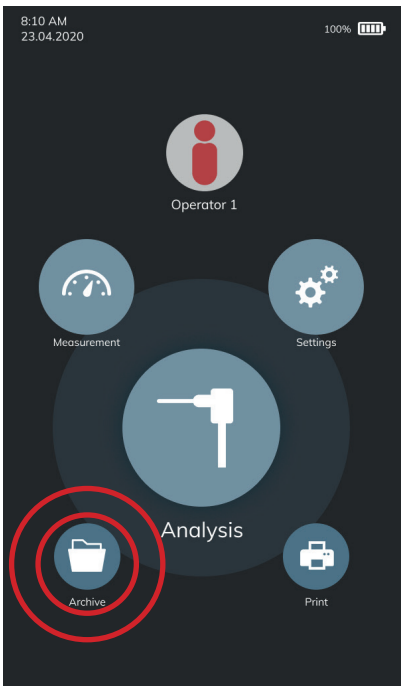

13.1 Archive organization

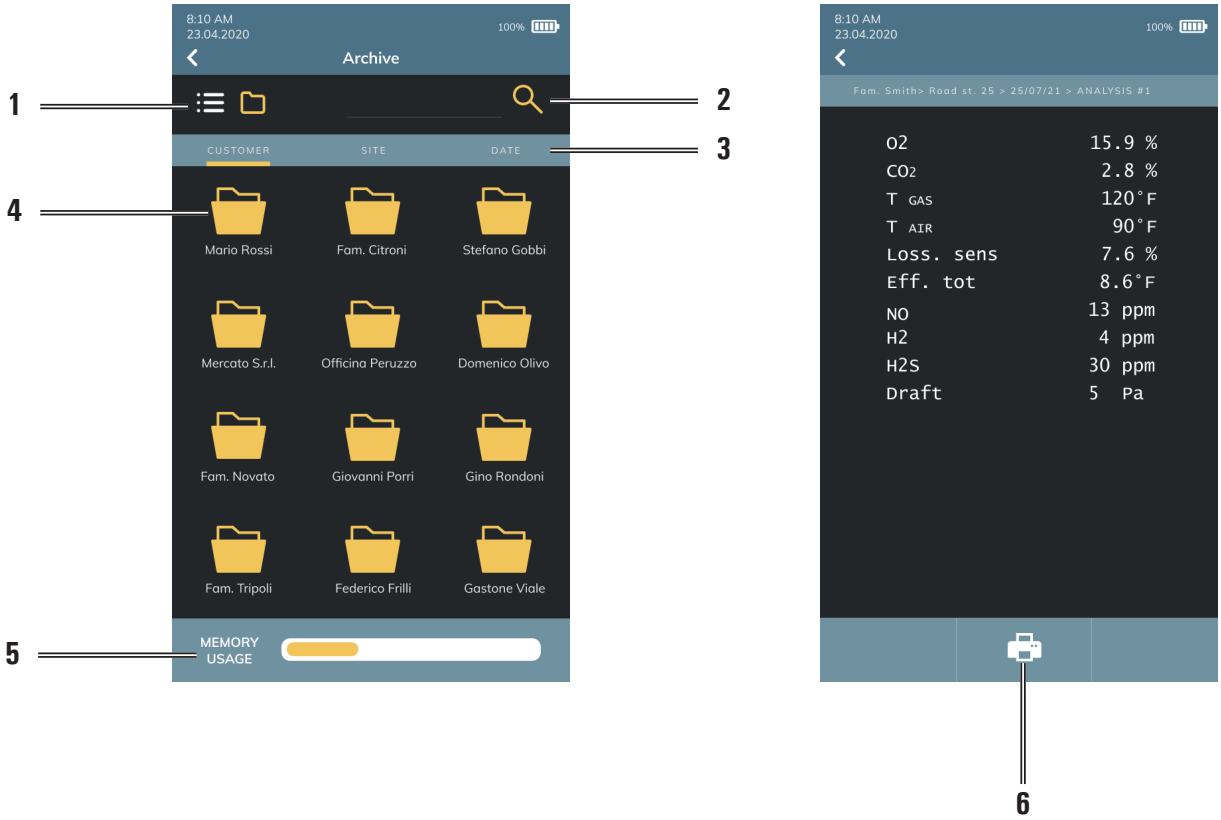

1	Select the folders visualization mode in the archive.	4	Example of viewing the archive by customer name.
2	"Search" function: search by text or by date.	5	Memory Usage: The yellow bar indicates the used memory space.
3	Change the archive view to: CUSTOMER: Folders are displayed per customer. SITE: Folders are displayed by address. DATE: Folders are displayed by date.	6	Print the ticket according to the settings on the "Print" menu.

13.2 Rename folders

By keeping pressed on a specific folder a pop-up appears which allows you to choose to rename the folder or to erase it.
By choosing “Rename” it is possible to modify the name of the folder.
Once the text has been changed, simply press anywhere on the display to save the change.

13.3 Delete folders

By keeping pressed on a specific folder a pop-up appears which allows you to choose to rename the folder or to erase it.
By choosing “Erase” it is possible to erase all the content of the selected folder, which can no longer be recovered.
From this menu it is not possible to delete all the contents of the archive in one time, but it is needed to proceed by deleting one folder at a time. In order to delete all the contents of the archive in one time, it is necessary to restore the instrument to default using the "Configuration-Instrument-Reset" menu; mind that all the instrument settings configured by the operator will be lost.

14.0 MAINTENANCE

14.1 Preventive maintenance

At least once a year send the instrument to a SERVICE CENTER for a complete overhaul and thorough internal cleaning.
Seitron Americas' highly qualified staff is always at your disposal and will provide you with all the sales, technical, application and maintenance details required. The service center will always return the instrument to you as new and in the shortest time possible. Calibration is performed using gases and instruments comparable with National and International Specimens.
Annual servicing is accompanied by a specific calibration certificate that is a guarantee of perfect instrument performance, besides being indispensable for users wishing to maintain ISO 9000 status.

14.2 Routine maintenance

This instrument was designed and manufactured using top-quality components. Proper and systematic maintenance will prevent the onset of malfunctions and will increase instrument life altogether.

The following basic requisites are to be respected:

- Do not expose the instrument to substantial thermal shocks before use. If this happens, wait for the temperature to return to normal working values.
- Do not clean the instrument with abrasive cleaners, thinners or other similar detergents.
- Avoid to suck in smokes directly without the filter inserted inside the water trap / filter assembly unit.
- Do not exceed sensor overload thresholds.
- When the analysis is over extract the sample probe from the stack and let the analyzer draw fresh air for a few minutes, or at least until the displayed parameters return to their original values:
  O2: >20.0%
  Toxic gases: <20ppm
- It is a good rule to empty the water trap / filter assembly unit at the end of every complete analysis or at least every 2 - 3 complete analyses.
- Replace the filter of the water trap / filter assembly unit if visibly dirty and/or impregnated with moisture.
- Clean the flue gas probe, unplugging it from the instrument, blowing air through the tubes in order to blow out any condensation left inside.

14.2.1 Cleaning the flue gas probe

When you have finished using the flue gas probe, before storing it inside its case it is a good rule to clean it as described below:

- Unplug the flue gas probe.
- Blow clean air inside the tube (through the connector pointed by the arrow) aiming to blow out any condensation residue which might be inside the tube.

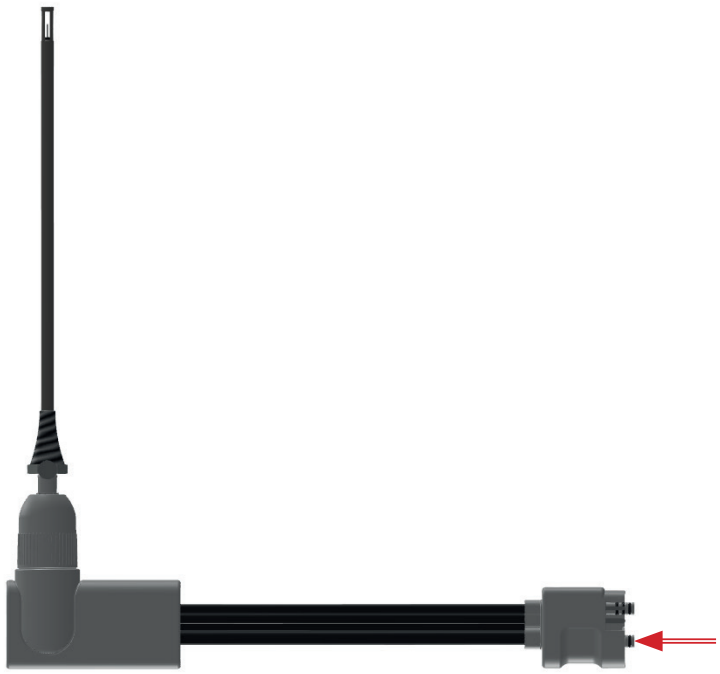

14.2.2 Maintenance for the water trap / filter assembly unit

Through the side opening, it is possible to verify the level of the water trap, by checking the notches on the side of the analyzer and the condition of the dust filter.

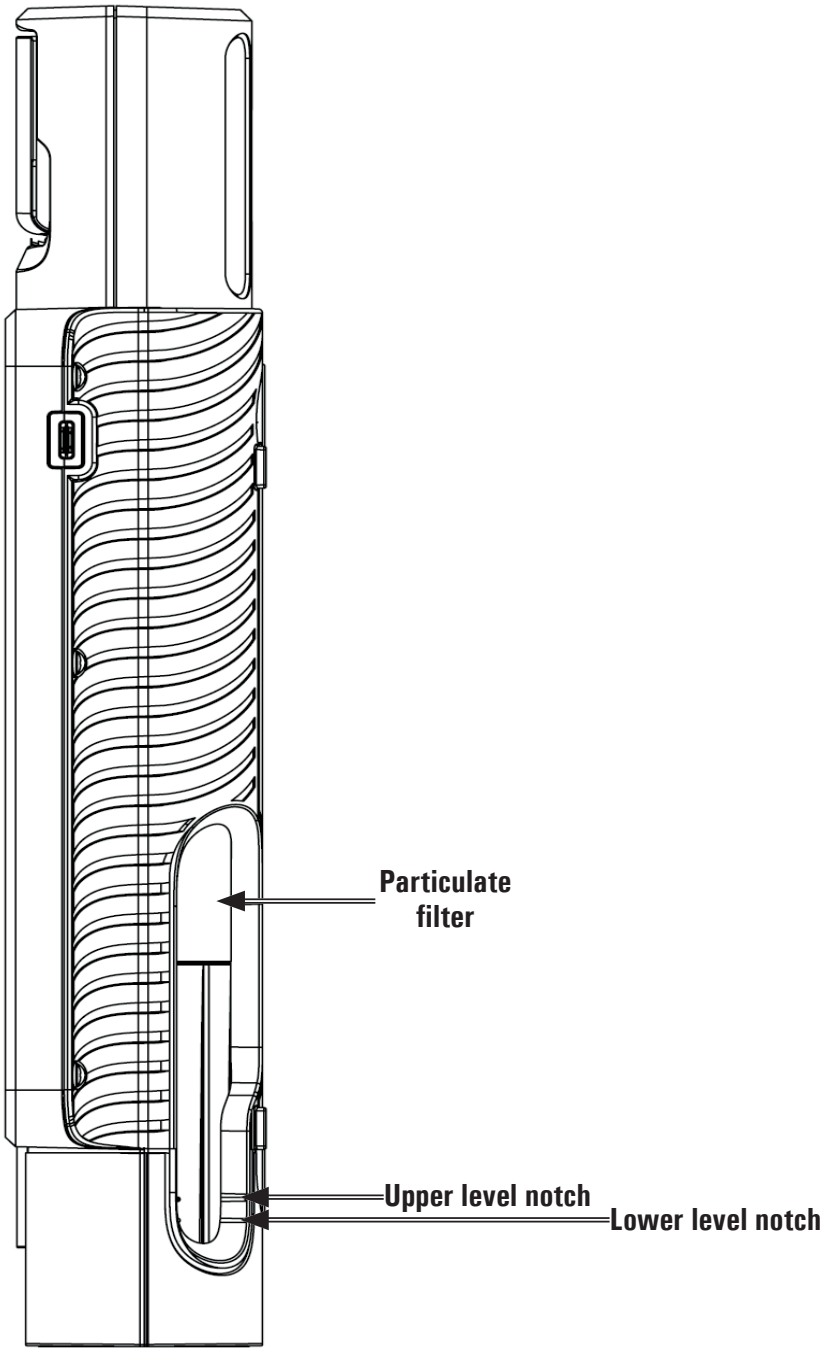

WARNING!

- **To check the condensation level, hold the instrument upright.**
- **Do not use the instrument with the condensation level between the two notches.**
- **Do not use the instrument with a blackened filter or clogged with moisture, so as not to obstruct the flow of gas.**

To perform maintenance, it is necessary to remove the entire water trap / filter assembly unit from the instrument, as indicated below:

1. The instrument must be switched off.
2. Using the special flaps, turn left the water trap unit.
3. Pull out the entire unit.

1

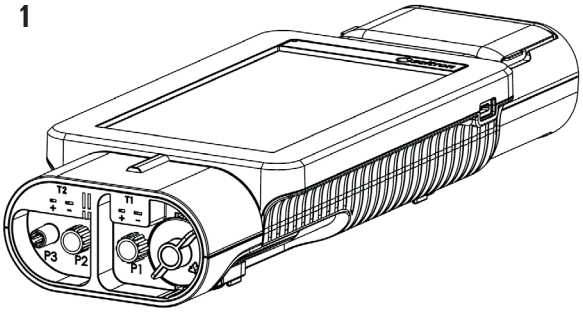

2

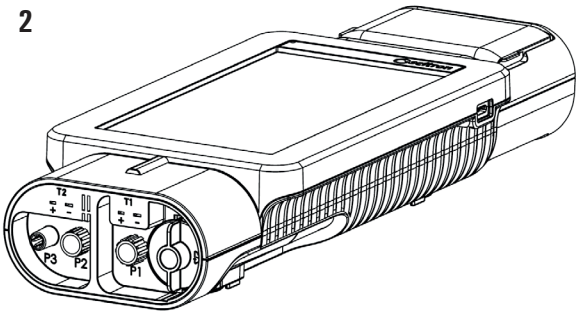

3

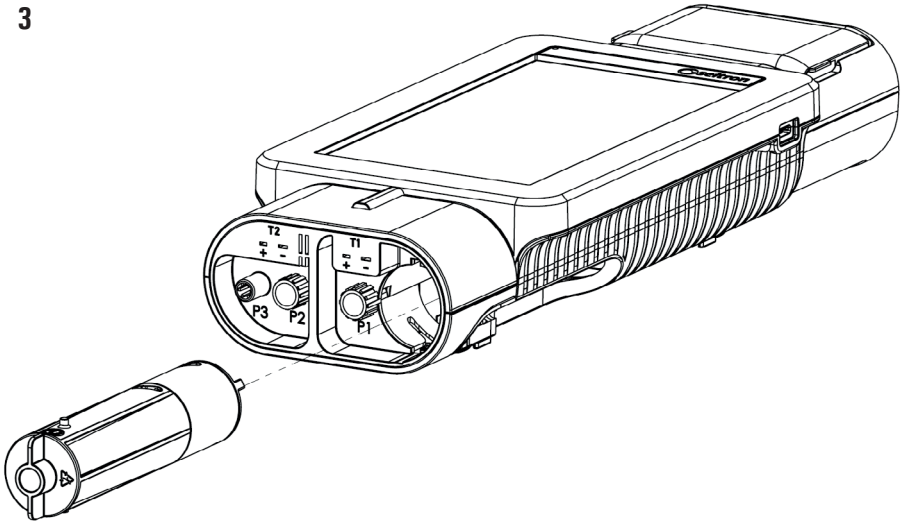

Draining the water trap

4. Separate the water collector from the entire unit.
5. Empty the water collector and clean it with water.
6. Place back on the water collector by reversing the operations described above.

4

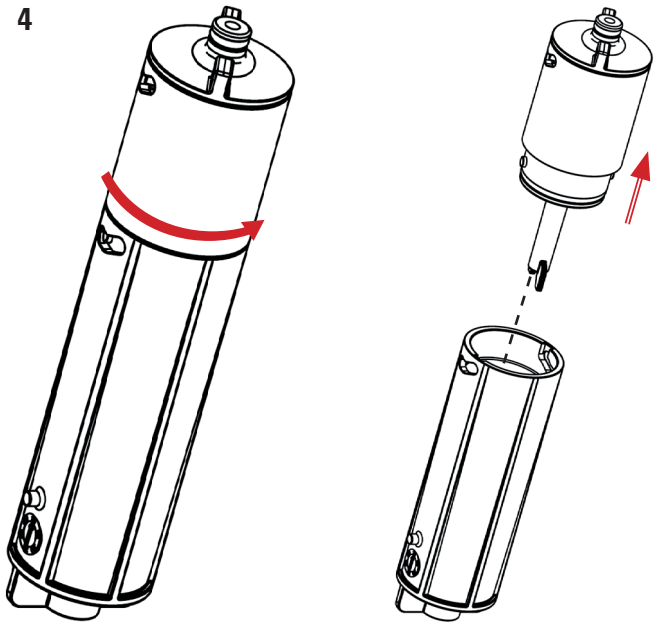

Replacing the dust filter

If the dust filter is black or dirty, especially on the outer surface, or clogged with humidity it is necessary to replace it immediately:

7. Turn right the filter holder.
8. Pull off the filter.
9. Clean with just water and dry all the plastic parts of the case holding the filter, separating it before the water collector (see point 4).
10. Insert the new filter.
11. Reassemble the filter holder body by proceeding in the reverse order up to here described.

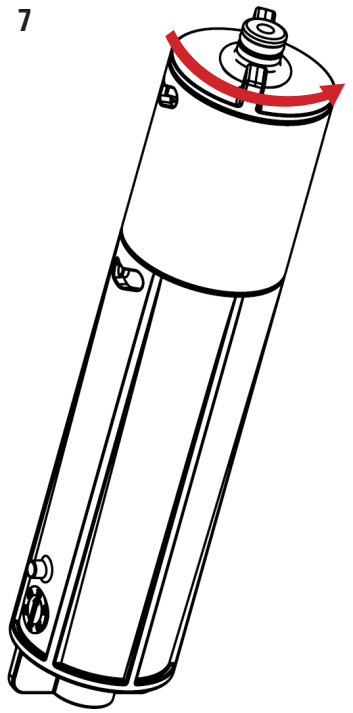

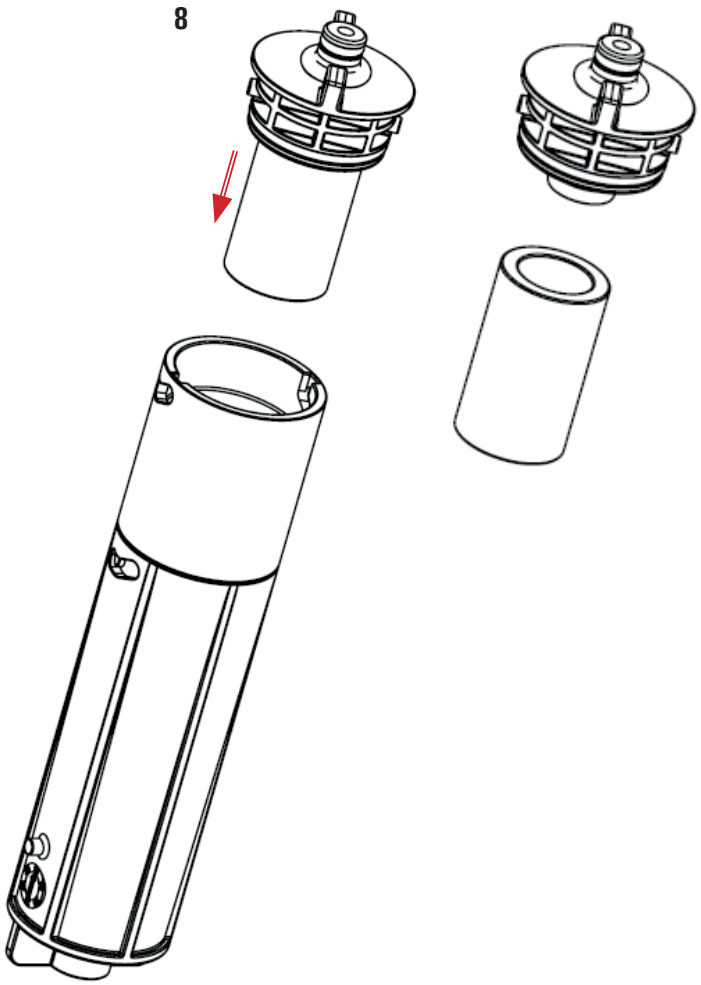

14.2.3 Instrument internal parts access

WARNING!

<u>Access the internal parts only if strictly necessary</u> to perform the gas sensors replacement or battery replacement.

Before accessing the internal parts, the instrument must be switched off and must NOT be connected to mains power with the power plug.

When managing the instrument without the cover, be sure not to lose the screws.

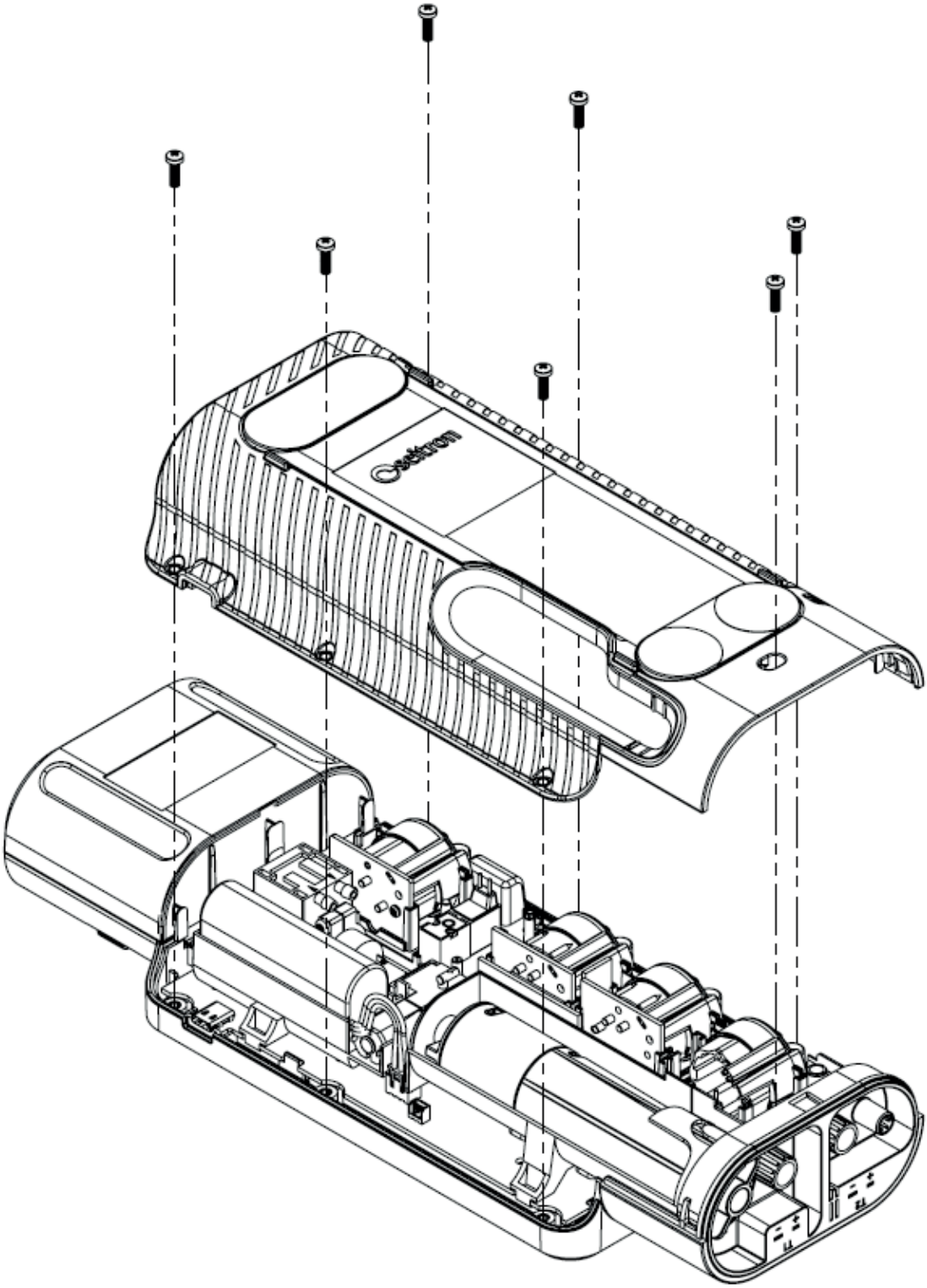

14.2.4 Sensor replacement

All sensors installed on the instrument can be replaced directly by the user, as long as the same installation position of the previous sensor is maintained.

14.2.5 Replacing of the sensors

In order to replace a sensor proceed as follows (example referred to the sensor installed in position S2):

1. Check the current position of the sensor to be replaced:
   Through the menu “Instrument configuration=> Diagnostic=> Sensors” check the current position of the : S2.
2. Locate in the instrument the exact position where the sensor to be replaced is installed:

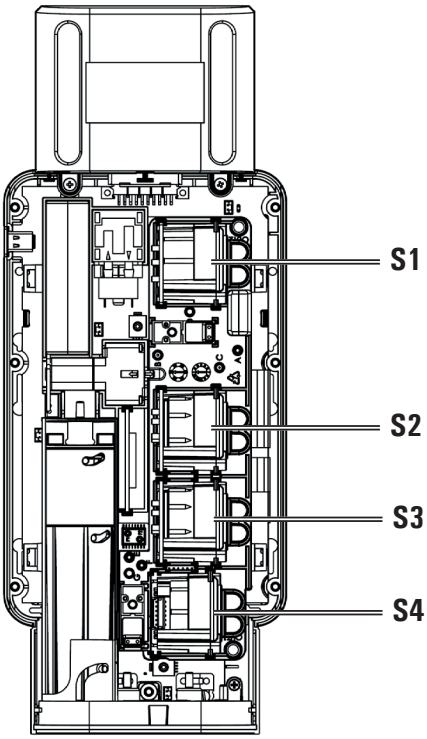

3. Once the position of the sensor to be replaced is located, pull upward the sensor.

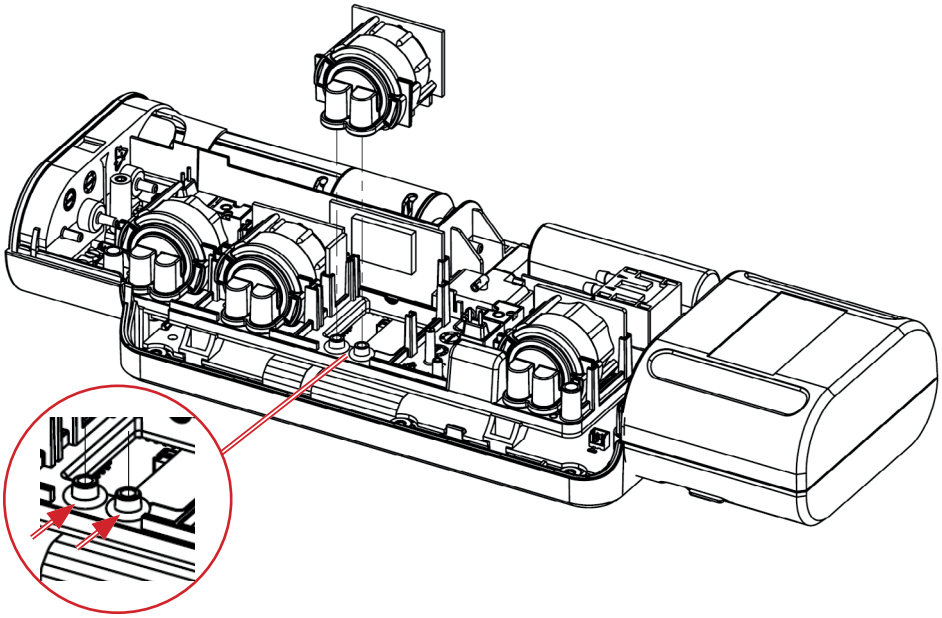

When the sensor is removed, it is possible that two O-rings of the sensor itself remain stuck in the joints of the instrument (see the example in the picture below); it is necessary to remove them.

4. Insert the new sensor by doing the reverse operation described up to here.

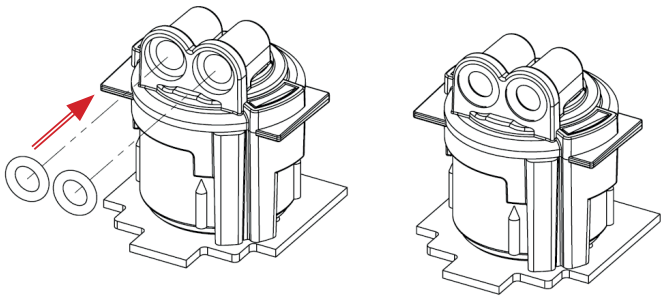

The new sensors are provided with two O-rings; be sure that these O-rings are well inserted inside the special groove of the sensor (see the example in the picture below).

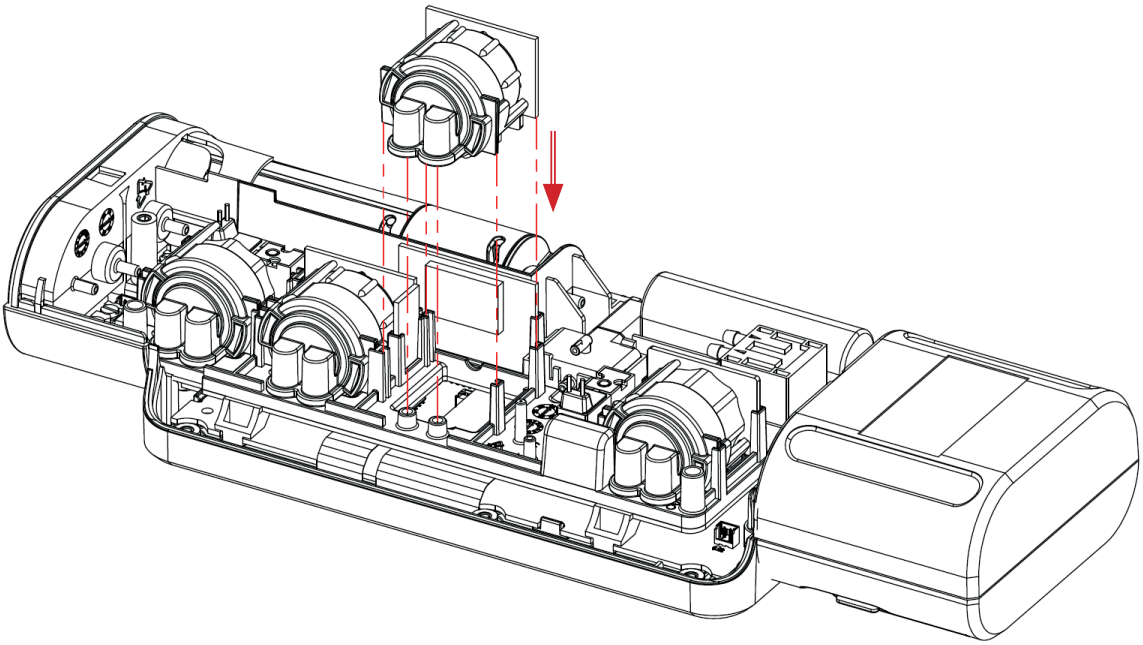

Insert the new sensor into the rails and push down until fully seated.

5. Close back the instrument.
6. By switching on the instrument it is possible to verify the correct operation of the new sensor, through the menu “Instrument configuration => Diagnostic => Sensors”. To access the menu use the following password: “**1111**“.

It is normal if a newly installed sensor gives a ‘current error’: it is necessary to wait some time, so that the sensor polarization can settle.

On chapter “17.0 MEASUREMENT AND ACCURACY RANGES” THE MINIMUM SETTLING TIME FOR EACH SENSOR IS INDICATED.

14.2.6 Battery replacement

In order to replace the battery package proceed as described below:

1. Remove the battery connector.
2. Remove the battery pack.
3. Insert the new battery; in order to close back the instrument, reverse the operations described above.

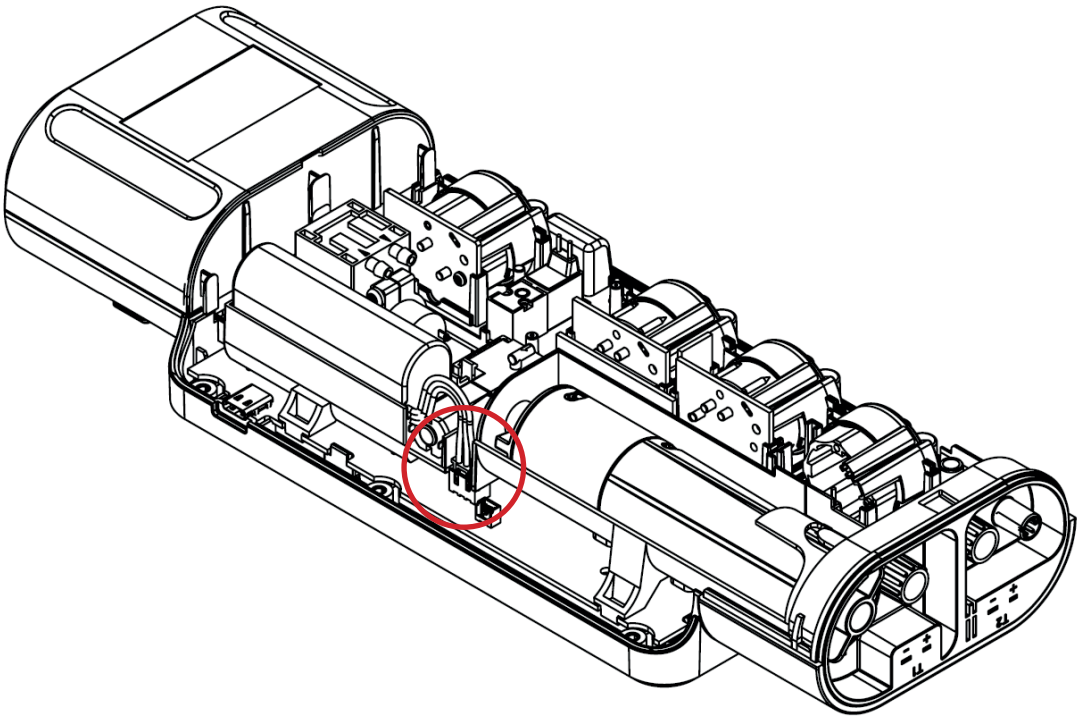

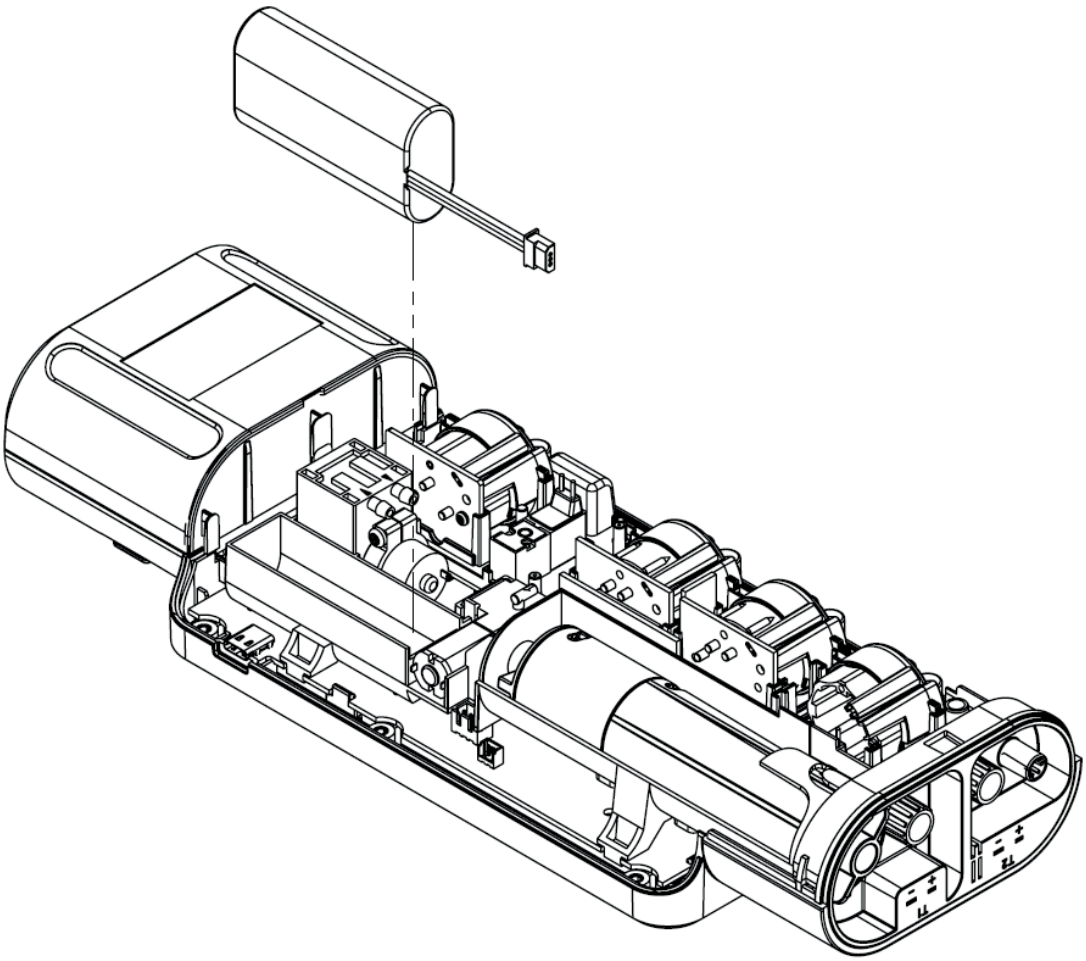

14.2.7 Replacing the paper roll of the internal printer (if provided)

To replace the printer paper roll, follow the operations described below.

1. Open the paper roll compartment lid, pulling upward the two sockets indicated by the arrows:

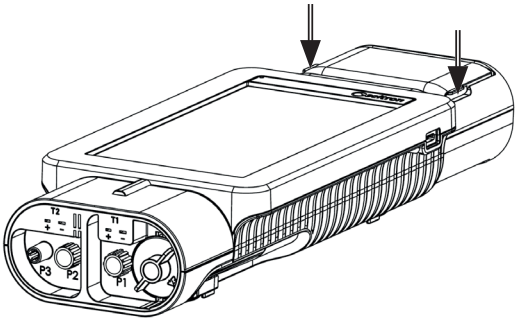

2. Fully raise the entire lid lock.

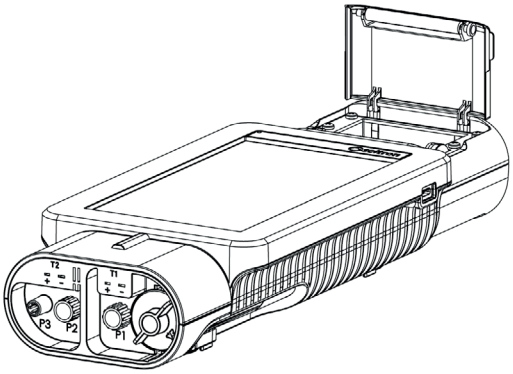

3. Insert the printer paper roll as shown in the following pictures.

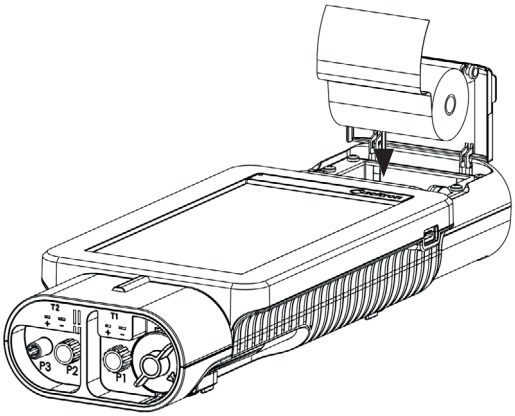

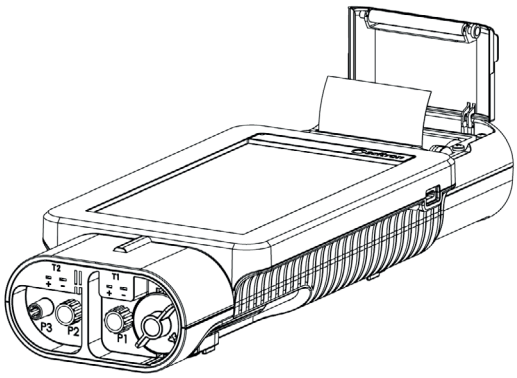

4. Close the entire printer cover assembly, applying a slight pressure on it in order to hook it to the instrument.

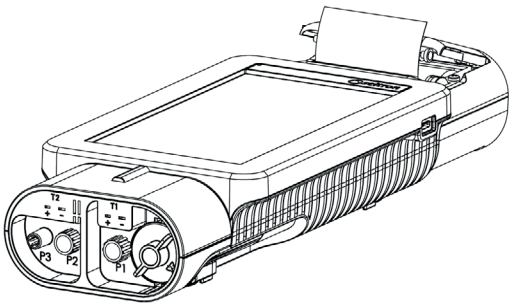

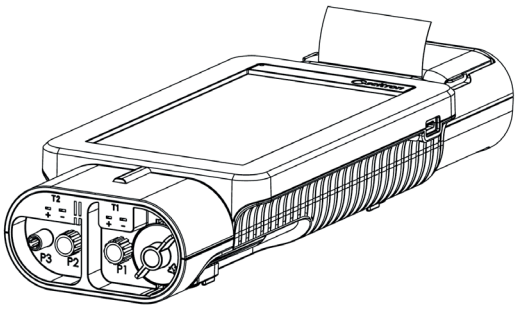

5. Now you can use the printer. See the chapter "Print".

14.3 Instrument expandability

If the purchased instrument is expandable, and it is needed to install extra sensors, it is necessary to send the instrument to an **Authorized Assistance Center**.
Note: the exact calibration process is only valid if performed using traceable samples.
For your information, the sensors that can be installed in the instrument are listed in the next chapter “17.0 Measurement and Accuracy Ranges”.

14.4 Firmware Update

The manufacturer periodically release instruments firmware updates aiming to correct any mistakes, improve the instruments performances or add new features.
The update can be performed by the user following the instructions below.

WARNING:
Check if the latest “Seitron Smart Analysis” PC software is installed on your computer.

Instructions for updating the combustion analyzer with a new firmware:

1. Connect to the web site www.seitron.it and download the firmware file at the section “Download - Analyzer Firmware”. This file is compressed with .zip extension.
2. Unzip the file thus obtaining the contents of the .zip file (.swu extension).
3. Connect the analyzer to the PC via the USB cable.
4. Open the software “Seitron Smart Analysis” and make the login with e-mail address and password; if you are at the first access you need to register.
   If the software is not installed on the PC, it is necessary to download it from the website www.seitron.it at the section “Download - App and Software”.
   4a. Click on the "USB" icon.
   4b. The software screen shows the IP address of the connected instrument (192.168.217.1); click on the “Play” button.
   4c. Click on the “Pair” button; the home page is shown. Now the instrument is associated with the software.
   4d. Click on the “burger menù” button (on the upper left corner) and select "Firmware update".
   4e. Click on the “Choose file” button and select the firmware file with .swu extension (see points 1 and 2).
   4f. Click on the "Firmware update" button.
   4g. The instrument is automatically restarted and displays the following screen:

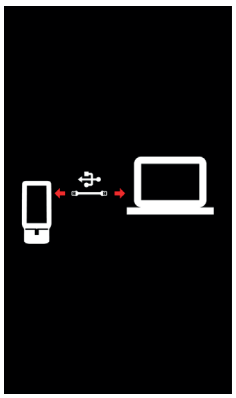

   4h. The instrument displays the home page; the analyzer is up to date: it can be turned off and disconnected from the PC.

15.0 GAS SENSORS

The gas sensors used in this instrument are electrochemical: thus, when the relative gas is detected, a chemical reaction takes place inside them that generates an electrical current.
The electrical current acquired by the instrument is then converted into the corresponding gas concentration.
Sensor life is strongly related to the consumption of the reagents within.
Sensor characteristics diminish as the reagents are consumed and when these have been used up completely the sensor must be replaced. The sensors must be recalibrated on a regular basis to assure measuring accuracy: recalibration can only be performed by a qualified SEITRON service centre.

15.1 Positioning of the gas sensors in the instrument

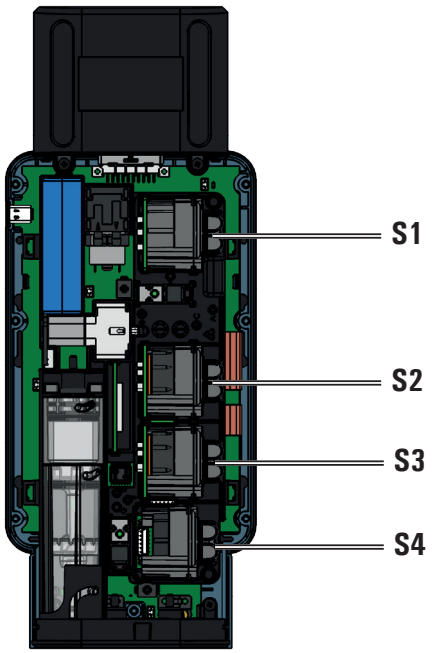

15.2 CxHy sensor for measurement of the unburnt hydrocarbons

The unburnt hydrocarbons are chemicals produced by an incomplete combustion of molecules (hydrocarbons) made of Carbon and Hydrogen.

These are usually named as HC or (better) CxHy: when this is filled with the actual values for the number of C and H atoms, the actual type of fuel is exactly defined. In case of Methane, as an example, the correct formula is CH4. In the following table is shown the cross sensitivity of the CxHy sensor when exposed to fuels different from Methane (CH4), assumed as 1.00.

GAS / VAPOR	RELATIVE RESPONSE (with respect to Methane)	GAIN ADJUSTMENT
Ethanol	0.75	1.33
Iso-Butane	0.60	1.67
Methane	1.00	1.00
Methanol	1.00	1.00
n-Butane	0.60	1.67
n-Heptane	0.45	2.22
n-Hexane	0.50	2.00
Propane	0.70	1.43

Calculation example:
Type of gas: iso-butane
Relative response: 0.6
Gain adjustment: 1.67
Reading value (related to methane): 1.34
Value = reading value x gain adjustment
Example: 1.34 x 1.67 = 2.24

WARNING
Gas vapours which contains silicone compounds (HMDS) can irreversibly damage the sensor.
When the CxHy sensor is installed in the instrument, keep the autozero at 180 seconds to allow a good pre-heating of the sensor itself.
The instrument battery life, once the CxHy is installed, lasts 10 hours, provided no printing is made.

15.3 CO2 sensor for Carbon Dioxide measurement in combustion processes

Carbon Dioxide (CO_2) is the result of combustion of an organic compound in presence of a quantity of oxygen sufficient to complete its oxidation. In nature, it is also produced by aerobic bacteria during the process of alcoholic fermentation and is the by product of respiration.

Many combustion processes are defined with 'mixed fuel' and is therefore difficult to calculate the amount of CO_2 produced. To avoid this drawback, the only way to know the amount of CO_2 produced in a combustion process with 'mixed fuel' is to measure the CO_2 with special NDIR sensors.

WARNING
When the CO_2 sensor is installed in the instrument, keep the autozero at 60 seconds to allow adequate pre-heating of the sensor itself.

16.0 TECHNICAL SPECIFICATIONS

Autozero:	Automatic autozero cycle with probe inserted in the stack.
Dilution (where required):	Measure range expansion system of the CO sensor up to 100.000ppm (10,00%) programmable as simple protection of the CO sensor, user programmable intervention threshold.
Gas measurement sensors:	Up to 4 configurable sensors: electrochemical, NDIR and pellistors.
Probe connection:	Using a solid and robust connector it is possible to measure smokes values, temperature and draft at the same time.
Self-diagnosis:	Check of all functions and internal sensors with anomalies report.
Temperature measurement:	Double input for K thermocouple with mignon connector for measuring the differential pressure (output and input).
Ambient temperature measurement:	Using the internal sensor or the T2 thermocouple input with remote probe.
Gas valve pressure measurement:	Using a pressure sensor and a direct connection to the gas valve with a dedicated tube it is possible to perform this measurement simultaneously with the other combustion control measures (input P3).
Draft measurement:	Internal sensor connected to port P1.
Fuel types:	Factory default (11 configured) and user programmable.
Power supply:	Battery pack Li-Ion.
Battery charger:	External power plug 5Vdc 2A with USB female type connector type A + connection to the instrument with the same serial supplied communication cable.
Charging time:	6 hours to charge from 0% to 90% (8 hours 100%). Charging can also be performed with the instrument connected to the PC (the instrument must be switched off), the charging time, depending on the current that can be supplied by the PC, and it can last up to 12 hours.
Instrument autonomy:	8 hours of continuous operation at an operating temperature of 77 °F (25 °C) (excluding printing).
Printer:	Integrated thermal printer with easy paper roll loading and paper sensor.
Printer power supply:	the printer uses the analyzer batteries.
Printer autonomy:	With batteries completely charged up to 40 analysis reports.
Internal data memory:	100 MB
User data:	8 programmable user names.
Printer header:	8 rows x 24 characters customizable by the user.
Display:	Color TFT 7” with CTP with backlight.
Data communication port and/or power supply:	USB with connector TYPE C.
Bluetooth:	yes.
Suction pump:	1,0 l/min prevalenze al camino fino a 100hPa.
Flow measurement:	Internal sensor for measuring the pump flow rate (value between 0.7 .. 1.2 l/m).
Water trap / filter assembly unit:	This is placed inside the instrument, removable by pulling it out, for water emptying and particulate filter replacement.
Line filter:	With replaceable cartridge, 99% efficiency with 20 um particles.
Smoke test:	Using an external hand pump; it is possible to enter and print the black smoke index.
Condensing boiler efficiency:	Condensing boiler automatic detection, with calculation and printing of the efficiency (> 100%) on the LHV.
Ambient CO measurement:	Separate measurement and printing of ambient CO values.
Operating temperature:	23°F .. 113°F (-5°C .. +45°C)
Storage temperature:	-4°F .. 122°F (-20°C .. +50°C)
Humidity limit:	20% .. 80% RH
Protection degree:	IP42
Air pressure:	Atmospheric

16.1 Analyzer dimensions

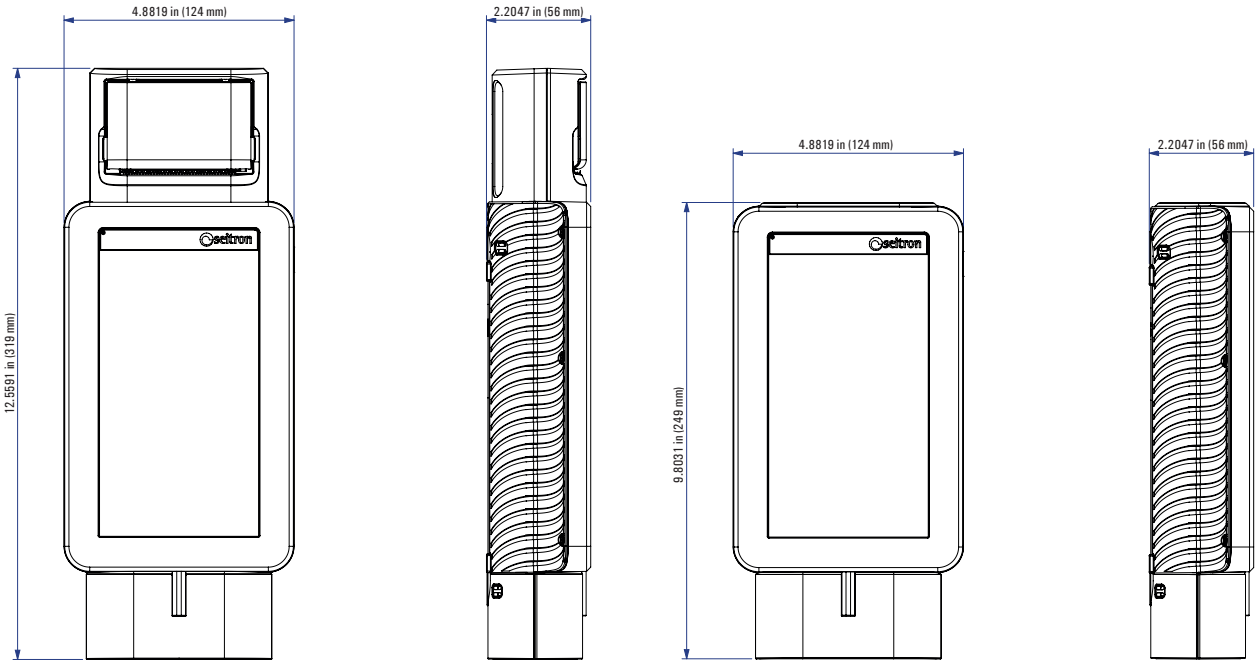

16.2 Case size

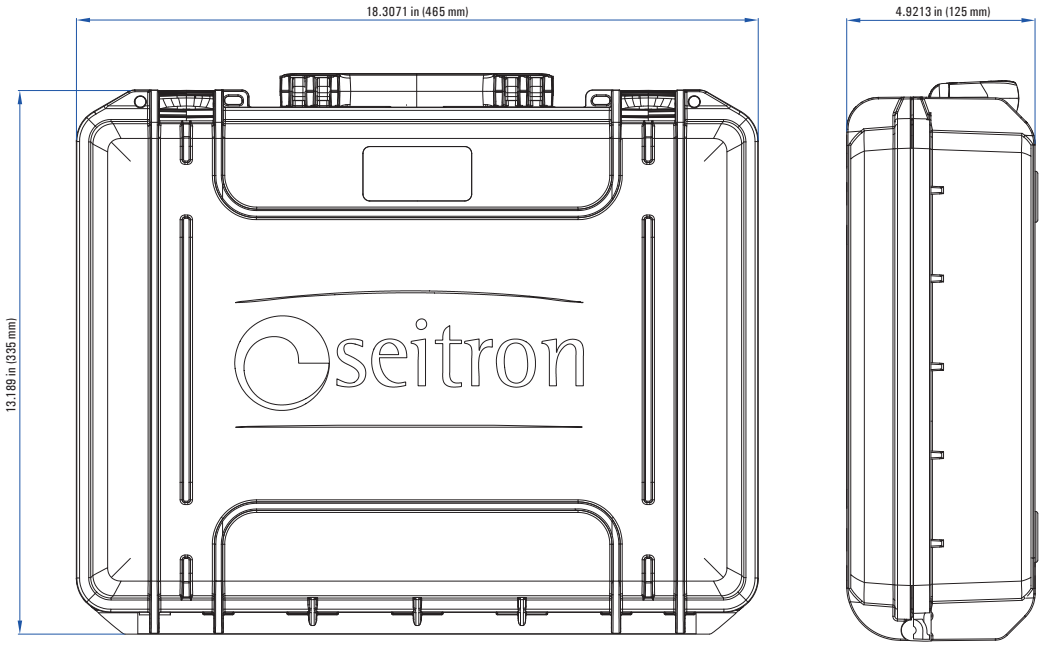

17.0 MEASUREMENT AND ACCURACY RANGES

MEASUREMENT	RANGE	RESOLUTION	ACCURACY	RESPONSE TIME t90	RECALIBRATION	AVERAGE LIFE	POSITION
O_2	0-25% Vol.	0.1% vol	±0.2% vol	20 s.	Yearly(1)	48 months	S4
CO compensated H2	0-8000 ppm	1 ppm	±10 ppm 0...200 ppm ±5% m.v. 201...2000 ppm ±10% m.v. 2001...8000 ppm	50 s.	Yearly(1)	48 months	S1
CO	0-20000 ppm	1 ppm	±100 ppm 0...2000 ppm ±5% m.v. 2001...4000 ppm ±10% m.v. 4001...20000 ppm	50 s.	Yearly(1)	48 months	S1 - S2 - S3 - S4
CO	0-100000 ppm	1 ppm	±100 ppm 0...1000 ppm ±10% m.v.1001...100000 ppm	50 s.	Yearly(1)	48 months	S1 - S2 - S3 - S4
NO Extended Range	0-500 ppm	0,1ppm	±2 ppm 0...40 ppm ±5% m.v. 40,1...500,1 ppm	50 s.	Yearly(1)	48 months	S2 - S3 - S4
	501-5000 ppm	1 ppm	±10% m.v. 501...5000 ppm				
NO_2 Extended Range	0-100,0ppm	0,1ppm	±2 ppm 0...40 ppm ±5% m.v. 40,1...100,1 ppm	50 s.	Yearly(1)	36 months	S2 - S3 - S4
	101-1000ppm	1 ppm	±10% m.v. 101...1000ppm				
SO_2 Extended Range	0-5000 ppm	1 ppm	±5 ppm 0...100 ppm ±5% m.v. 101...5000 ppm	50 s.	Yearly(1)	36 months	S2 - S3 - S4
SO_2 (J57-2017) Extended Range	0-500 ppm	0.1 ppm	±2 ppm 0...40 ppm ±5% m.v. 40,1...500,1 ppm	50 s.	Yearly(1)	36 months	S2 - S3 - S4
	500-5000 ppm	1 ppm	±10% m.v. 501...5000 ppm				
H_2	0-2000 ppm	1ppm	±10 ppm 0...100 ppm ±10% m.v. 101...2000 ppm	90 s.	Yearly(1)	24 months	S2 - S3 - S4
H_2	0-4%Vol.			90 s.	Yearly(1)	24 months	S2 - S3 - S4
H_2S	0-500 ppm	0,1ppm	±5 ppm 0...100 ppm ±5% m.v. 101...500,0 ppm	50 s.	Yearly(1)	36 months	S2 - S3 - S4
H_2S	0-5000 ppm	1ppm	±5 ppm 0...100 ppm ±5% m.v. 101...500 ppm ±10% m.v. 501...5000 ppm	50 s.	Yearly(1)	36 months	S2 - S3 - S4
NH_3	0-500 ppm	0,1ppm	±10 ppm 0..100 ppm ±10% m.v. 100,1..500,0 ppm	90 s.	Yearly(1)	36 months	S2 - S3 - S4
CO_2	0-50% Vol.	0,01%	±1 % Vol. 0..10,00% Vol ±2% full scale 10,01%..50,00% Vol	50 s.	Yearly(1)	60 months	S2 - S3 - S4
CH_4	0-100% Vol.	0,01% Vol	±0,3 % Vol. 0..10% Vol ±10% m.v. 10,01%..100,00% Vol	50 s.	Yearly(1)	60 months	S2 - S3 - S4
CxHy	0-5% Vol. CH4	0,01% Vol	±0,25 % abs	50 s.	Yearly(1)	48 months	S2 - S3 - S4
PI (CO/CO2 ratio)		0.01%					
Temperature (T1)	4 .. 2282 °F	32.18 °F	±32 °F 4 .. 212.0 °F ± 1% m.v. 212.18 .. 2282.0 °F				
Temperature (T2)	4 .. 2282 °F	32.18 °F	±32 °F 4 .. 212.0 °F ± 1% m.v. 212.18 .. 2282.0 °F				
Temperature differential (T1-T2)	32 .. 2282 °F	32.18 °F					
Pressure (P1)	-250.0 .. 250.0 Pa	0.1 Pa	±0,5 Pa -10.0 .. +10.0 Pa ±2 Pa +10.1 .. +250.0 Pa ±2 Pa -10.1 .. -250.0 Pa				

MEASUREMENT	RANGE	RESOLUTION	ACCURACY	RESPONSE TIME t90	RECALIBRATION	AVERAGE LIFE	POSITION
Pressure (P3)	-100.0 .. 500.0 hPa	0.01 hPa	±1% m.v. -2.01 .. -100.0 hPa ±0.02 hPa -2.00 .. +2.00 hPa ±1% m.v. +2.01 .. +500.00 hPa				
Air index	0.00 .. 9.50	0.01					
Excess air (“e”)	0 .. 850 %	1 %					
Stack loss	0.0 .. 100.0 %	0.1 %					
Efficiency	0.0 .. 100.0 %	0.1 %					
Condensation efficiency	0.0 .. 120.0 %	0.1 %					
Smoke index	0 .. 9						

Note:
(1) Recommended by the manufacturer.

18.0 SPARE PARTS AND SERVICING

18.1 Spare parts

CODE	DESCRIPTION
AJPB01	Li-Ion 3,7V 6000 mAh Battery pack
AJKA01	Power plug 100-240V~/12 VDC 2A with 2 mt cable + Italian plug + Adapter cable USB-A / USB-C
AJCR01	Plastic case
AJTA01	Water trap / filter assembly unit
AAC FA01	Particulate / Dust filter (1 piece)
AARC10	Thermal paper roll for integrated printer; size 2.2x1.3"
Novo O2-LL	O_2 sensor, pre-calibrated and interchangeable
Novo CO/H2 Mid	CO+H2 Mid Range (0-20,000ppm) sensor, pre-calibrated and interchangeable
Novo CO/H2	CO+H2 double range (High / low) sensor, pre-calibrated and interchangeable
Novo CO High	CO High Range (0-100,000ppm) sensor, pre-calibrated and interchangeable
Novo NO	NO double range (High / low) sensor, pre-calibrated and interchangeable
Novo NO2	NO2 sensor, pre-calibrated and interchangeable
Novo SO2	SO2 sensor, pre-calibrated and interchangeable
Novo H2	H2 sensor, pre-calibrated and interchangeable
Novo H2S	H2S sensor, pre-calibrated and interchangeable
Novo H2S Low	H2S (low range) sensor, pre-calibrated and interchangeable
Novo NH3 Low	NH3 (low range) sensor, pre-calibrated and interchangeable

18.2 Accessories

CODE	DESCRIPTION
AA PM02+AS0000MF + AA SU01	Manual pump kit for smoke, scale, filters
AA SA08	8" air temperature probe (cable length 10 ft)
AJSJ01	Flue gas probe handle with 6 ft cable
AJ PT01	7" probe tip (maximum working temperature 752°F) for flue gas probe handle
AJ PT02	12" probe tip (maximum working temperature 1112°F) for flue gas probe handle
AJ PT03	29.5" probe tip (maximum working temperature 1472°F) for flue gas probe handle
AJ PT04	39" probe tip (maximum working temperature 2192°F) for flue gas probe handle
AJEX01	10 ft extension cable for gas sampling probe
AA SP01	Protective screen for gas sampling probe
AAFS02	Inox filter with adapter

18.3 Service Centers

Seitron Americas Inc.
4622 E. Street Rd.
Trevose, PA 19053 - USA
Tel.: (215) 660-9777
Fax.: (215) 660-9770
E-mail: service@seitronamericas.com
http://www.seitronamericas.com

ANNEX A - "Seitron Smart Analysis" APP

Data Management with “SEITRON SMART ANALYSIS” APP.

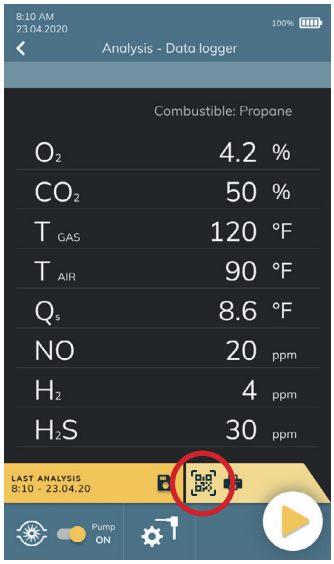

SCAN THE QR CODE USING SEITRON APP “SEITRON SMART ANALYSIS”, TO DOWNLOAD THE ACQUIRED DATA.

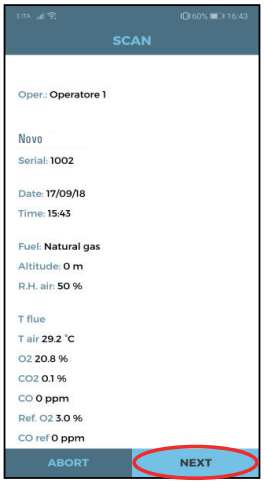

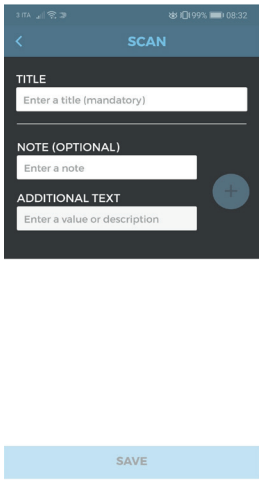

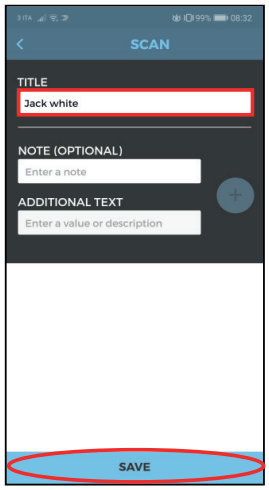

THE ACQUIRED DATA ARE SAVED IN THE INSTRUMENT MEMORY.

APP settings.

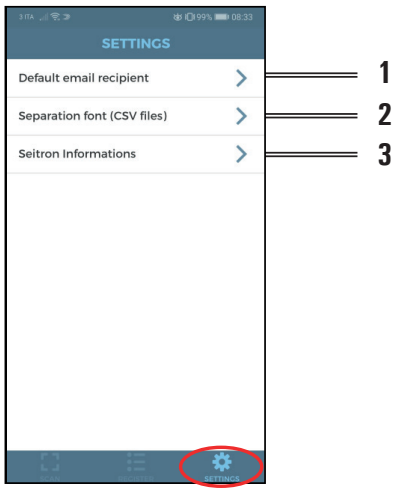

REFERENCE	SETTING
1	Insert a default email address.
2	Select the data separation mode: comma (,) or semicolon (;). This setting is useful if it’s needed to import the csv file in an electronic sheet such as Excel or google drive.
3	Visualize the version of the APP and Seitron contacts.

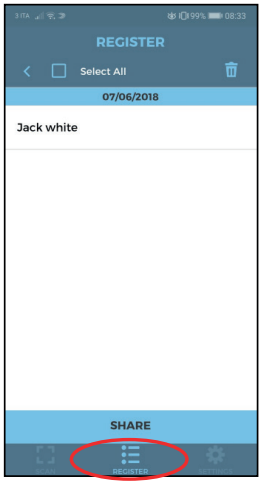

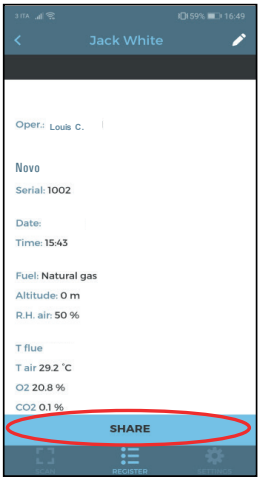

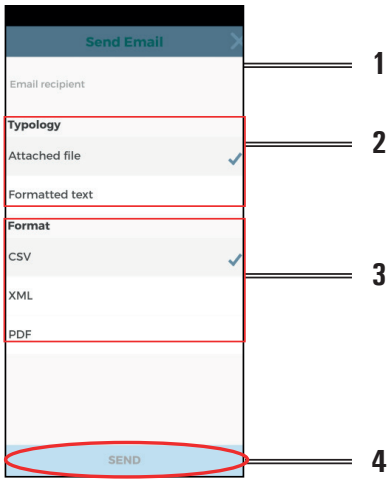

REFERENCE	SETTING
1	Insert an email address if different from the default one.
2	Select one of the two modes of data sharing.
3	Select the file format to share.
4	Select the application to use for sending.

Example of the exported csv file and imported in an excel file:

Novo		
Serial number	00001100	
Date	05/05/2021	
Time	12:00	
Fuel	Natural gas	
Altitud.	0.000000	m
Air humidity	50	%
O2	15.7	%
CO	23	ppm
CO2	2.9	%
T gas	213.08	°F
T air	80.6	°F
Eff. sens	90.0	%
NO	0.000	mV
CO-SEN	258.270	mV
O2	1.131.867	mV
I sen	0.000	uA
I sen	0.000	uA
I sen	100.346	uA
T az	72.5	°F
ΔT	164.48	°F
Loss sens	10.0	%
λ,n	4.01	
Exc. air	4.01	
Eff. cond	0.0	%
Eff. tot	90.0	%
Loss sens	10.0	%
Loss tot	10.0	%
Eff. sens	90.0	%
Eff. cond	0.0	%
Eff. tot	90.0	%
NO	0	ppm
NOx	0	ppm
CO (0.0%)	0	ppm
NO (0.0%)	0	ppm
NOx (0.0%)	0	ppm
Draft	4.5	Pa

ANNEX B - Analysis report

Example of Total analysis report.

```
COMPANY Ltd.
Park Road, 9
Tel.02/12345678

Oper.: John Smith

Sign.: _______________

Novo
Serial: 999989

Date: 05/05/2021
Time: 10.30

Fuel: Natural gas
Altitude: 0 m
R.H. air: 50 %

Analysis: Average

O2              15.7 %
CO2              2.9 ppm
l,n             4.01
T gas         213.08 °F
T air           80.6 °F
dT              73.6 %
Loss sens       10.0 %
Eff. sens       90.0 %
Eff. cond        0.0 %
Eff. tot        90.0 %
CO                23 ppm
NO                14 ppm
NOX               15 ppm
Ref. O2:         0.0 %
CO ref            92 ppm
Ref. O2:         0.0 %
NO ref            56 ppm
Ref. O2:         0.0 %
NOX ref.:          60 ppm

Draft            4.5 Pa

Analysis: 1
05/05/2021 10.00

O2               15.7 %
CO2               2.9 %
l,n             4.01
T gas         213.08 °F
T air           80.6 °F
dT            164.12 °F
Loss sens        10.0 %
Eff. sens        90.0 %
Eff. cond         0.0 %
Eff. tot         90.0 %
CO                23 ppm
NO                14 ppm
NOX               15 ppm
Ref. O2:         0.0 %
CO ref            92 ppm
Ref. O2:         0.0 %
NO ref            52 ppm
Ref. O2:         0.0 %
NOX ref.:          56 ppm

Draft            4.5 Pa


Analysis: 2
05/05/2021 10.15

O2               15.7 %
CO2               2.9 %
l,n             4.01
T gas         213.08 °F
T air           80.6 °F
dT            164.12 °F
Loss sens        10.0 %
Eff. sens        90.0 %
Eff. cond         0.0 %
Eff. tot         90.0 %
CO                23 ppm
NO                14 ppm
NOX               15 ppm
Ref. O2:         0.0 %
CO ref            92 ppm
Ref. O2:         0.0 %
NO ref            56 ppm
Ref. O2:         0.0 %
NOX ref.:          60 ppm

Draft            4.5 Pa

Analysis: 3
05/05/2021 10.20

O2               15.7 %
CO2               2.9 %
l,n             4.01
T gas         213.08 °F
T air           80.6 °F
dT            164.12 °F
Loss sens        10.1 %
Eff. sens        90.0 %
Eff. cond         0.0 %
Eff. tot         90.0 %
CO                23 ppm
NO                14 ppm
NOX               15 ppm
Ref. O2:         0.0 %
CO ref            92 ppm
Ref. O2:         0.0 %
NO ref            52 ppm
Ref. O2:         0.0 %
NOX ref.:          56 ppm

Draft            4.5 Pa
```

Example of Full analysis report.

```
COMPANY Ltd.
Park Road, 9
Tel.02/12345678

Oper.: John Smith

Sign.: _____

Novo
Serial: 999989

Date: 05/05/2021
Time: 10.30

Fuel: Natural gas
Altitude: 0 m
R.H. air: 50 %

Analysis: Average

O2              15.9 %
CO2              2.8 ppm
l,n             4.18
T gas        177.08 °F
T air         80.42 °F
dT              53.7 %
Loss sens        7.6 %
Eff. sens       92.4 %
Eff. cond        0.0 %
Eff. tot         92.4 %
CO                27 ppm
NO                11 ppm
NOX               12 ppm
Ref. O2:         0.0 %
CO ref           113 ppm
Ref. O2:         0.0 %
NO ref            46 ppm
Ref. O2:         0.0 %
NOX ref.:          50 ppm

Draft            4.5 Pa

Note:  -------------------
-------------------------
-------------------------
-------------------------
-------------------------
-------------------------
-------------------------
```

Example of Partial Paper print-out.

```
Date: 05/05/2021
Time: 10.15

Fuel: Natural gas
Altitude: 0 m
R.H. air: 50 %

O2              15.7 %
CO2              2.9 ppm
l,n             4.01
T gas        177.08 °F
T air         80.42 °F
dT              68.5 %
Loss sens        9.3 %
Eff. sens       90.7 %
Eff. cond        0.0 %
Eff. tot        90.7 %
CO                23 ppm
NO                13 ppm
NOX               14 ppm
Ref. O2:         0.0 %
CO ref            92 ppm
Ref. O2:         0.0 %
NO ref            52 ppm
Ref. O2:         0.0 %
NOX ref.:         56 ppm
```

Example of Draft Paper print-out.

```
COMPANY Ltd.
Park Road, 9
Tel.02/12345678

Oper.: John Smith

Sign.: _______________

Novo
Serial: 999989

Date: 05/05/2021
Time: 10.30

Draft          4.5 Pa

Note: ---------------------
---------------------------
```

Example of Smoke Test print-out.

```
COMPANY Ltd.
Park Road, 9
Tel.02/12345678

Oper.: John Smith

Sign.: _______________

Novo
Serial: 999989

Date: 05/05/2021
Time: 10.30

Fuel: Diesel

Smoke:    3  1  2
Aver. n°:       2
```

Example of ambient CO Paper print-out.

```
COMPANY Ltd.
Park Road, 9
Tel.02/12345678

Oper.: John Smith

Sign.: _______________

Novo
Serial: 999989

Date: 05/05/2021
Time: 10.30

CO amb           0 ppm

Note:  ---------------------
----------------------------
----------------------------
```

ANNEX C - Optional measures list

MEASURE	DEFINITION
λ, n (l,n)	**Air index** (defined as λ, sometimes also indicated as n).
E (Exc. Air)	**Air excess.** Expressed as a percentage according to the formula in the appendix B, is the ratio between the volume of air actually entering the combustion chamber and the one theoretically needed.
ΔT (dT)	**Differential temperature:** It is the difference between the smoke temperature and the air combustion temperature.
Loss sens	**Stack losses in relation to the Lower Heating Value (LHV):** It is the percentage of dissipated heat through the stack referred to the lower heating value (LHV).
Loss sens	**Stack losses in relation to the Higher Heating Value (HHV):** It is the percentage of dissipated heat through the stack referred to the higher heating value (HHV).
Eff. sens	**Sensible efficiency in relation to the Lower Heating Value (LHV):** It is the burner efficiency calculated, as the ratio between conventional heating power and the burner heating power. Among the combustion losses, only the sensible heat lost with flue gasses is taken into account, thus neglecting the radiation losses and incomplete combustion losses. This value is referred to the Lower Heating Value (LHV) of the fuel and cannot exceed 100%. The sensible efficiency value is to be compared against minimum efficiency stated for the heating system performances.
Eff. sens	**Sensible efficiency in relation to the Higher Heating Value (HHV):** It is the burner efficiency calculated as the ratio between conventional heating power and the burner heating power. Among the combustion losses, only the sensible heat lost with flue gasses is taken into account, thus neglecting the radiation losses and incomplete combustion losses. This value is referred to the Higher Heating Value (HHV) of the fuel and cannot exceed 100%. The sensible efficiency value is to be compared against minimum efficiency stated for the heating system performances.
Eff. cond	**Condensation efficiency in relation to the Lower Heating Value (LHV):** Efficiency deriving from the condensation of water vapor contained in flue gases, calculated, and it is referred to the LHV.
Eff. cond	**Condensation efficiency in relation to the Higher Heating Value (HHV):** Efficiency deriving from the condensation of water vapor contained in flue gases referred to the HHV.
Eff. tot Eff. tot=Eff. sens+Eff. cond	**Total efficiency in relation to the Lower Heating Value (LHV):** Total efficiency. It is the sum of sensible efficiency and condensation efficiency. It is referred to LHV (Lower Heating Value) and can exceed 100%.
Eff. tot	**Total efficiency in relation to the Higher Heating Value (HHV):** Total efficiency. It is the sum of sensible efficiency and condensation efficiency. It is referred to HHV (Higher Heating Value) and can not exceed 100%.
Loss tot	**Total stack losses (HHV):** It is the total heat percentage dissipated through the stack.
NOx	Measure of nitrogen oxides quantity; the measurement unit can be set in the special menu.
NOx ppm	Measure of nitrogen oxides quantity; the measurement unit can not be set but it is fixed in ppm.
NOx (ref. O2)	Measure of nitrogen oxides quantity referring to O2; the measurement unit can be set in the special menu.
NOx (ref. O2) ppm	Measure of nitrogen oxides quantity referring to O2; the measurement unit can not be set but it is fixed in ppm.
PI	**Poison Index (CO/CO2 ratio):** It is defined as the ratio between CO and CO2 useful to determine whether the system needs maintenance.
CO	CO quantity measurement. Measurement units: ppm - mg/m3 - mg/kWh - g/GJ - g/m3 - mg/kWh - % - ng/J

MISURA	DEFINIZIONE
CO (REF)	CO quantity measurement with O2 reference. Measurement units: ppm - mg/m3 - mg/kWh - g/GJ - g/m3 - g/kWh - % - ng/J
CO amb. ext.	Measure of the outer CO level when using the external CO probe. Measurement unit: ppm. This is the only measurement unit which is possible to set.

WARNING!

OTHER THAN THE MEASUREMENT LIST ABOVE, IT IS POSSIBLE TO VISUALIZE THE MEASURE OF THE DETECTED GAS ALSO IN PPM, DEPENDING ON THE KIND OF MEASUREMENT SENSOR IN THE INSTRUMENT. IF IT IS NECESSARY TO MEASURE THE VALUE OF GAS WITH TWO DIFFERENT MEASUREMENT UNITS, SELECT IN THE MEASUREMENTS LIST THE DESIRED GAS IN PPM AND CHANGE THE MEASUREMENT UNIT FOR THE SAME GAS IN THE "CONFIGURATION->ANALYSIS->MEASUREMENT UNIT" SCREEN. NOW THE INSTRUMENT ACQUIRES THE MEASURE WITH TWO DIFFERENT UNITS (PPM AND THE ONE PREVIOUSLY SET).

ANNEX D - Coefficient of the fuels and Formulas

The following chart lists the coefficients of the memorised fuels, used for calculating losses and efficiencies.

Coefficients for calculating combustion efficiency								
Fuel	**A1 USA**	**B**	**CO2t** (%)	**PCI** (KJ/Kg)	**PCS** (KJ/Kg)	**M air** (Kg/Kg)	**M H2O** (Kg/Kg)	**V gas dry** (m^3/Kg)
Natural Gas	0.0280	0.0090	11.70	50050	55550	17.17	2.250	11.94
#2 Oil	0.0305	0.0066	15.70	42900	45700	14.30	1.136	10.34
#4 Oil	0.0306	0.0066	15.80	41100	43500	13.80	0.973	10.06
#6 Oil	0.0346	0.0048	16.00	39800	42197	13.61	0.981	9.97
Diesel	0.0305	0.0066	15.70	42900	45700	14.30	1.136	10.34
Wood/Pellets 8%	0.0354	0.0071	19.01	18150	19750	6.02	0.660	4.58
Bagasse	0.0395	0.0219	20.45	6950	8834	2.50	0.779	1.93
Coal	0.0320	0.0000	18.60	31400	32300	10.70	0.370	8.14
Biogas	0.0353	0.0091	17.33	17800	19800	6.08	0.830	4.55
Bio-Fuel 5%	0.0305	0.0066	15.70	42600	45400	14.22	1.133	10.64
Butane	0.0277	0.0073	14.00	45360	49150	15.38	1.548	10.99
Propane	0.0277	0.0073	13.70	45950	49950	15.61	1.638	11.11

Details of the coefficients of the fuels:

- CO2 t: The value of CO_2 generated by combustion in stoichiometric condition, i.e. without excess Oxygen and therefore maximum.
  A1, A2, B: Also please have a look at the Siegert formulas from the European standard EN50379-1 (in the following).
  A1 is the parameter in the Siegert Formula when the O2 measurement is available.
  A2 is used when the CO2 measurement is available.
  Note: - Please also consider that in the U.S. usually the A1 parameter is the same as the 'European' A1 BUT divided by 2.
  - For Germany coefficients A1 and A2 are swapped.

Flue gas heat losses are calculated from measured oxygen content according to the relationship:

$$q_A = (t_A - t_L) \times \left(\frac{A1}{21 - O_2} + B \right)$$

Flue gas heat losses are calculated from measured carbon dioxide content according to the relationship:

$$q_A = (t_A - t_L) \times \left(\frac{A2}{CO_2} + B \right)$$

Air index is calculated with the formula:
$\lambda=21/(21-O2)$, where O_2 is the oxygen residual concentration in the combustion smokes.

Air excess is calculated with the formula:
$e=(\lambda-1)*100$

- CO conv: Conversion coefficient from ppm to mg/KWh. It can be expressed as a function of the gas density (CO in this case) and the volume of the dry smoke.
- NO conv: Same as CO conv, but for NO.
- NOx conv: Same as CO conv, but for NOx.
- SO2 conv: Same as CO conv, but for SO2.
- PCI: Potere Calorifico Inferiore. Italian for LHV (Lower Heating Value).
- PCS: Potere Calorifico Superiore. Italian for HHV (Higher Heating Value).
- m H2O: Mass of the air produced (per each Kg of fuel) in the combustion in stoichiometric condition.
- m Air: Mass of the air needed for combustion in stoichiometric condition.
- V g.d.: Volume of dry smokes produced in the combustion.

WARRANTY CERTIFICATE

WARRANTY

The Novo flue gas analyzer is guaranteed for 48 months from purchasing date including the internal electro-chemical sensors which are also guaranteed for 48 months from purchasing date.
Seitron undertakes to repair or replace, free of charge, those parts that, in its opinion, are found to be faulty during the warranty period. The products which are found defective during the above mentioned periods of time have to be delivered to Seitron Laboratories carriage paid. The following cases are not covered by this warranty: accidental breakage due to transport, inappropriate use or use that does not comply with the indications in the product's instruction leaflet.
Any mistreatment, repairs and modifications to the product not explicitly authorized by Seitron shall invalidate the present warranty.

IMPORTANT

For the product to be repaired under Warranty, please send a copy of this Certificate along with the instrument to be repaired, together with a brief explanation of the fault observed.

Space reserved for user

Name: _____

Company: _____

User's notes: _____

_____

_____

_____

_____

_____

Serial number (S.N.): _____

Date: _____

seitron Americas

Seitron Americas Inc.
4622 Street Rd. Trevose, PA 19053 - USA
Tel: (215) 660-9777 - Fax: (215) 660-9770 - service@seitronamericas.com - www.seitronamericas.com

J100000000S9 037479 220721

TROUBLESHOOTING

SYMPTOM	PROBABLE CAUSES AND REMEDIES
The instrument does not work at all. When the On/Off pushbutton is pressed the instrument does not come on.	**a.** Keep the On/Off key depressed for at least 3 seconds. **b.** The battery is low; connect the battery charger to the instrument. **c.** The battery may not be connected to the instrument; Access the internal parts and insert the battery connector into its socket on the printed circuit (see chapter 15.2.3 and 15.2.6). d. The instrument is faulty: Contact the assistance center.
The batteries last less than 8 hours.	**a.** Battery capacity is limited by low temperatures. To achieve a longer battery life it is recommended to store the instrument at higher temperatures. **b.** The battery is old. Battery capacity tends to diminish with age. If battery life has become unacceptable, replace the battery.
The battery, after a complete charging cycle, can't hold a charge.	If the batteries are old tend to reduce their capacity. If the autonomy has become unacceptable it is advisable to replace the battery pack.
After auto-calibration is complete the sensor diagnostics screen appears and gives an error for one or more sensors.	**a.** Auto-calibration took place while the flue gas was being sampled. **b.** The O_2 sensor is broken, not connected properly, or not connected at all. **c.** The sensor was not allowed the necessary adjustment time or the instrument was left with a low battery for too long.
A pressure sensor error is shown in the pressure/draught screen.	There is a calibration problem. Send the instrument to a service centre.
The analysis screen gives a flue gas temperature (Tf) error.	**a.** The thermocouple is not connected; connect the thermocouple to the analyser **b.** The thermocouple is faulty. Send the complete probe to a service centre.
The following symbol "----" appears on the analysis screen.	The instrument is not able to calculate a numerical value based on the flue gas analysis conducted. The "----" are replaced by numbers when the analyser detects valid combustion data.
"Max. Lim." or "Min. Lim" appears on the analysis screen.	The relative sensor is detecting a value that is beyond the analyser's measuring range. "Max. Lim" or "Min. Lim." are replaced by numbers when the instrument reveals values that are within the measuring range.
In the analysis screen the indicated values are not reliable.	The causes can be multiple and depend on the sensors, the pump or the smoke gas probe. Contact the Service Center for an accurate analysis.
After the autozero, the pump always remains on.	It's normal. When starting the instrument, there is an autozero procedure during which the pump must suck in room air. After that, the pump remains on to suck in combustion smokes: only with the pump on is it possible to be sure of a correct and real-time measurement of the gases.
The sample pump sounds as though it is running slowly, tends to stop or does not even start.	**a.** The gas flow is obstructed. Check that the dust filter is clean and not clogged with condensation. Also check that the tube connected to the probe is not crushed. **b.** Sample intake flow is obstructed. Check that the particulate filter is clean. **c.** Bad electrical connection of the pump. Contact the service center. **d.** Faulty pump. Contact the service center.
A sensor is not visible in the sensor diagnostics screen.	The sensor was not detected (not communicating or has been removed). Check that the sensor is inserted correctly. If necessary, try to remove and reinsert the sensor.

The built-in printer of the instrument does not print correctly.	**a.** Check the type of paper you are using as it should only be thermal paper. **b.** Check the direction of the paper roll. **c.** If the paper is not dragged, check the closure of the printer door and the integrity of the feed roller.
The (external) Bluetooth® printer prints too small characters.	It is necessary to set the factory font. Press and hold the "POWER" button for a few seconds; you will hear the following beeps in succession: **a.** A short beep; **b.** One long beep; **c.** Two beeps in quick succession = font set to 12x24.
During the tightness test a "sensor error" is reported.	Check for the correct connection of the hose to the P3 pressure input.

Seitron Americas Inc.
4622 Street Rd. Trevose, PA 19053 - USA
Tel: (215) 660-9777 Fax: (215) 660-9770
service@seitronamericas.com - www.seitronamericas.com